XR FLUSH MOUNT

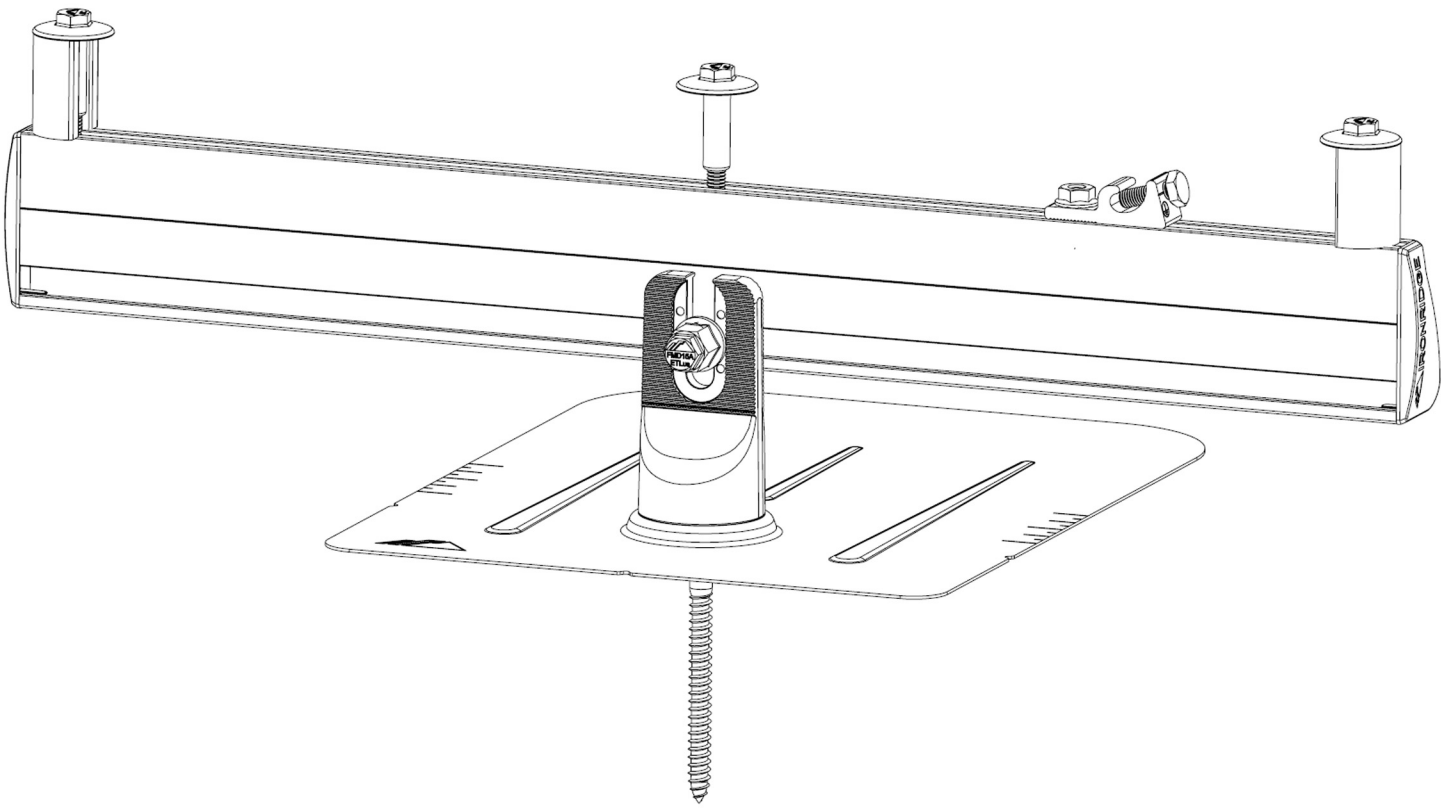

INSTALLATION MANUAL

IRONRIDGE

CONTENTS

DISCLAIMER 1
RATINGS 2
MARKINGS 2
ATTACHMENTS 3
COMPONENTS 4
1. ATTACH BASES 5
2. PLACE RAILS 5
3. SECURE LUGS 6
4. SECURE MODULES 6
CAMO 7
BONDING JUMPER 7
EXPANSION JOINTS 8
ELECTRICAL DIAGRAM 9
COMPOSITION SHINGLE 10-12
TILE 13-15
ADDITIONAL ROOF TYPES 15
LOW SLOPE ROOFS 16
CONDUIT PENETRATION 17
CONDUIT MOUNT 18
END CAPS 19
WIRE CLIPS 19
JAYBOX 19
MICROINVERTER KITS 20
SYSTEMS USING MICROSTORAGE PRODUCTS 21
FRAMELESS MODULE KITS 21
CONTOUR 22
MODULE COMPATIBILITY 23-29
FRAMELESS MODULE COMPATABILITY 30

DISCLAIMER

This manual describes proper installation procedures and provides necessary standards required for product reliability. Warranty details are available on website. All installers must thoroughly read this manual and have a clear understanding of the installation procedures prior to installation. Any installation or use of this product not in accord with or not authorized by this written instruction shall void any and all warranties, express or implied, on the product or the use of the product and may cause failure, property damage and personal injury. IronRidge is not liable for any unauthorized use. Install and use only with other IronRidge products to ensure proper fit and function.

IT IS THE INSTALLER'S RESPONSIBILITY TO:

- Ensure safe installation of all electrical aspects of the array. All electrical installation and procedures should be conducted by a licensed and bonded electrician or solar contractor. Routine maintenance of a module or panel shall not involve breaking or disturbing the bonding path of the system. All work must comply with national, state and local installation procedures, product and safety standards.
- Comply with all applicable local or national building and fire codes, including any that may supersede this manual.
- Ensure all products are appropriate for the installation, environment, and array under the site's loading conditions.
- Use only IronRidge parts or parts recommended by IronRidge; substituting parts may void any applicable warranty.
- Review the Design Assistant and Certification Letters to confirm design specifications.
- Ensure provided information is accurate. Issues resulting from inaccurate information are the installer's responsibility.
- Ensure bare copper grounding wire does not contact aluminum and zinc-plated steel components, to prevent risk of galvanic corrosion.
- If loose components or loose fasteners are found during periodic inspection, re-tighten immediately. Any components showing signs of corrosion or damage that compromise safety shall be replaced immediately.
- Provide an appropriate method of direct-to-earth grounding according to the latest edition of the National Electrical Code, including NEC 250: Grounding and Bonding, and NEC 690: Solar Photovoltaic Systems.
- Disconnect AC power before servicing or removing modules, AC modules, microinverters and power optimizers.
- Review module and any 3rd party manufacturer's documentation for compatibility and compliance with warranty terms and conditions.
- Ensure that the roof is in good condition prior to instaling any IronRidge components.

RATINGS

UL 2703 LISTED

#5003807
#5028987
#5034990

Conforms to UL STD 2703 Standard for Safety First Edition: Mounting Systems, Mounting Devices, Clamping/ Retention Devices, and Ground Lugs for Use with Flat-Plate Photovoltaic Modules and Panels

- Scope of Evaluation includes bonding, grounding, mechanical loading, and fire classification
- Max Overcurrent Protective Device (OCPD) Rating: 40A
- Max Module Size: 30.5 ft²
- Module Orientation: Portrait or Landscape
- System Design Load Rating: 10 PSF downward, 5 PSF upward, 5 PSF lateral
- Actual system structural capacity including spans and cantilevers are defined by PE stamped certification letters
- CAMO Specific Design Load rating: 50 PSF downward, 50 PSF upward, 15 PSF lateral

Certified to CSA TIL No. A-40 Photovoltaic Module Racking Systems

- Load Rating: 2400 PA [50 PSF]

CLASS A SYSTEM FIRE RATING PER UL 2703

- Any Roof Slope with Module Types 1, 2, 3, 13, 19, 25, 29, 30 and 38: : Allowed with any roof slope. Any module-to-roof gap is permitted, with no perimeter guarding required
- Module Types 4 and 5: Allowed with Steep Slope Roofs (≥ 9.5°). Any module-to-roof gap is permitted, low edge guarding (Trim) required
- Class A rated PV systems can be installed on Class A, B, and C roofs without affecting the roof fire rating

CLASS B SYSTEM FIRE RATING PER UL 2703

- Module Types 4 and 5: Allowed with Steep Slope Roofs (≥ 9.5°). Any module-to-roof gap is permitted, with no perimeter guarding required.

WATER SEAL RATINGS:

- UL 441 or TAS100(A) (Flashfoot2, L-Mount, All Tile Hook, Flat Tile Fly, Knockout Tile, Halo UltraGrip)
- Tested and evaluated without sealant
- Any roofing manufacturer approved sealant is allowed.
- Ratings applicable for steep roof slopes 2:12 and above.

UL 2703A RATINGS:

- Conforms to UL SUBJECT 2703A - Halo UltraGrip and BUG
- Steep Slope Ratings applicable for Asphalt Shingle roofs with slopes 2:12 and up
- Low Slope Ratings applicable for Roll Roofing (Rolled Comp) roofs with slopes 1:12 and up
- Low Slope Ratings applicable for Modified Bitumen (Mod-Bit) roofs with slopes 1/4:12 and up
- Installer must verify roof slope prior to installing HUG or BUG to validate applicable roof types

CONFORMS TO UL STD 1565 AND CERTIFIED TO CSA C22.2 #18.5-13 POSITIONING DEVICES - WIRE CLIP

- Operating Temperature Range: -35 to 90C
- Maximum Load: 10lbs
- For outdoor use

STRUCTURAL CERTIFICATION

- Designed and Certified for Compliance with the International Building Code & ASCE/SEI-7

FLORIDA PRODUCT APPROVAL #FL29843

- Approved for installation both inside and outside High Velocity Hurricane Zones (HVHZ)
- Additional details and full list of approved components can be found here

MARKINGS

Product markings are located on the Grounding Lug bolt head.

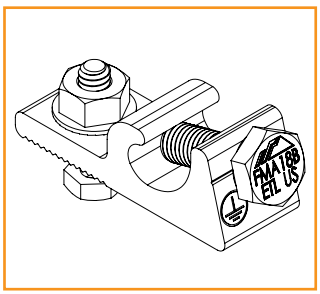

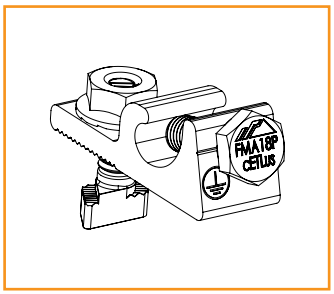

ATTACHMENTS

PRE-INSTALLATION

- ☐ Verify module compatibility. See Page 21 for info.

TOOLS REQUIRED

- ☐ Cordless Drill (non-impact)
- ☐ Impact Driver (for lag bolts)
- ☐ Torque Wrench (0-300 in-lbs)
- ☐ 7/16” Socket
- ☐ 1/2" Socket
- ☐ 9/16" Socket
- ☐ 7/32" Drill Bit
- ☐ 3/8" Socket
- ☐ 1/8" Drill Bit
- ☐ 1/4" Drill Bit
- ☐ T30 Bit
- ☐ Channel Lock Pliers
- ☐ #3 Phillips Bit
- ☐ 3/16" Hex Bit

BONDING HARDWARE TORQUE VALUES

Please refer to each attachment's individual section for full details on all torque values and instructions.

- ☐ 3/8" Bonding Hardware Nuts (7/16" Socket): 300 in-lbs
- ☐ All Tile Hook Carriage Bolts (7/16" Socket): 132 in-lbs
- ☐ Flat Tile Hook Carriage Bolts (7/16" Socket): 132 in-lbs
- ☐ Flat Roof Attachment Nuts (9/16” Socket): 250 in-lbs
- ☐ Lynx Set Screw (3/16" Hex Drive): 150 in-lbs
- ☐ Lynx Flange Nut (1/2" Socket): 150 in-lbs
- ☐ Corruslide Flange Nut (1/2" Socket): 150 in-lbs
- ☐ SimlpeGrip Flange Nut (1/2" Socket): 150 in-lbs

► **If using previous version of Integrated Grounding Mid Clamps, End Clamps, Expansion Joints, Classic Composition Mount, Frameless Module Clamp and for a list of approved 3rd party components please refer to Alternate Components Addendum (Version 2.4)**

ATTACHMENTS

COMPOSITION SHINGLE

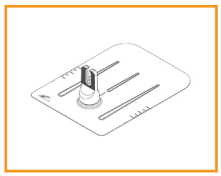
FlashFoot2

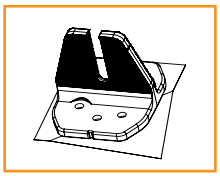
HUG
(Halo UltraGrip)

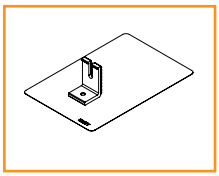
GF1

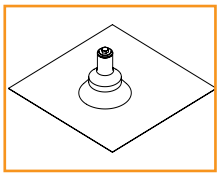
QM QBase

TILE

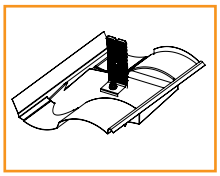
Knockout Tile

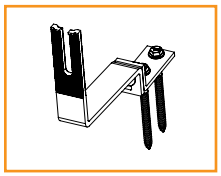
Flat Tile Fly

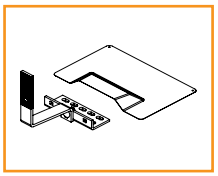
All Tile Hook and Flashing (optional)

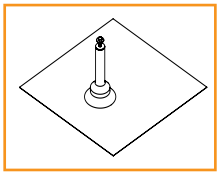
QM QBase Tile

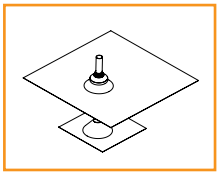
QM Tile Conduit Penetration

ADDITIONAL ROOF TYPES

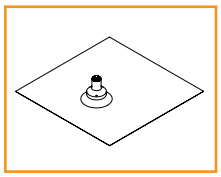
QM Qbase Shake - Slate - Metal Shingle

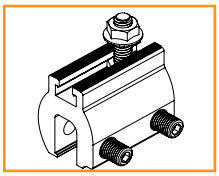
QM Lynx Metal Roof Attachment

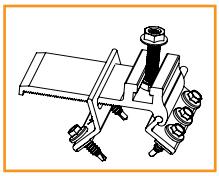
Corruslide

See Page 5 for other approved metal roof attachments

LOW SLOPE ROOF

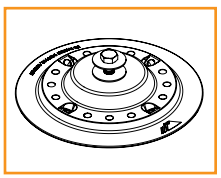
Flat Roof Attachment

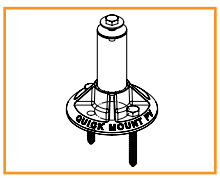
QM QBase Mount

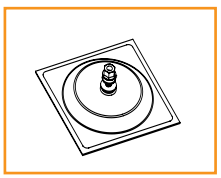
SimpleGrip SQ

PRE-INSTALLATION

- ☐ Verify module compatibility. See Page 21 for info.

TOOLS REQUIRED

- ☐ Cordless Drill (non-impact)
- ☐ Impact Driver (for lag bolts)
- ☐ Torque Wrench (0-300 in-lbs)
- ☐ 7/16" Socket
- ☐ 1/2" Socket
- ☐ 9/16" Socket
- ☐ 7/32" Drill bit
- ☐ 1/8" Drill bit
- ☐ 1/4" Drill bit
- ☐ T30 Torx Bit
- ☐ Channel Lock Pliers
- ☐ #3 Phillips Bit
- ☐ Paddle Bit

BONDING HARDWARE TORQUE VALUES

Please refer to each attachment's individual section for full details on all torque values and instructions.

- ☐ Universal Fastening Object (7/16" Socket): 80 in-lbs
- ☐ End Fastening Object (7/16" Socket): 80 in-lbs
- ☐ Rail Grounding Lug Nut (7/16" Socket): 80 in-lbs
- ☐ Module Grounding Lug
  - ☐ Grounding Nut (1/2" Socket): 60 in-lbs
  - ☐ Grounding Lug Terminal Screws (5/16" Socket): 20 in-lbs
- ☐ Microinverter Kit Nuts (7/16" Socket): 80 in-lbs
- ☐ 3/8" Bonding Hardware Nuts (7/16" Socket): 300 in-lbs
- ☐ Contour Clamp (T-30 Torx Bit): 80 in-lbs

► **Unless otherwise noted, all components have been evaluated for multiple use. They can be uninstalled and reinstalled in the same or new location.**

► ***CAMO is not intended for installation on any island or within 3 miles from any coastline and 2 miles from saltwater bays and inlets. CAMOs installed in these regions will not be covered by the IronRidge Product Warranty. Refer to IronRidge Design Assistant for installation applicability.**

COMPONENTS

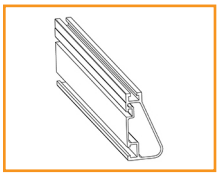
XR Rail

Wire Clip

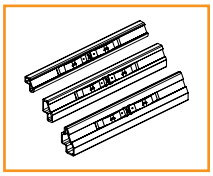
BOSS

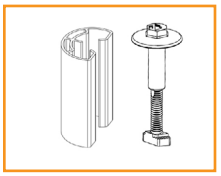
UFO and Stopper Sleeve (30-46MM)

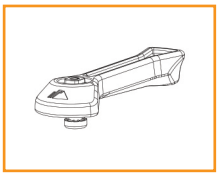
CAMO

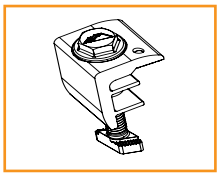
EFO (30-40mm)

End Cap

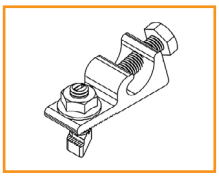
Rail Grounding Lug

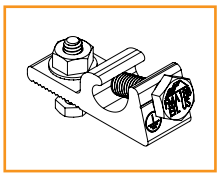
Module Grounding Lug

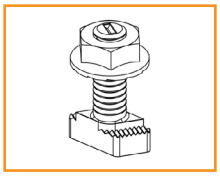
Microinverter Kit

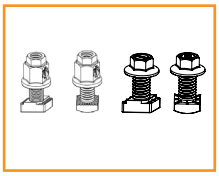
3/8" Bonding Hardware

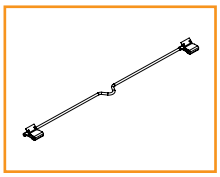
8" Bonding Jumper Single Use Only

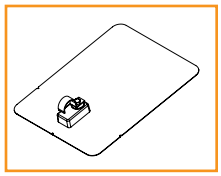
QM Classic Conduit Comp Mount

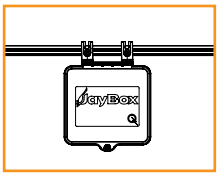

JayBox

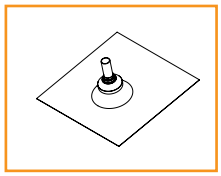
QM Composition Conduit Penetration

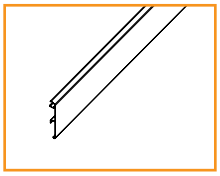
Contour Trim

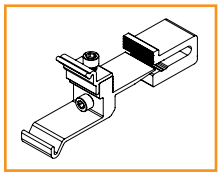
Contour Clamp

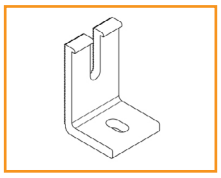
L-Foot

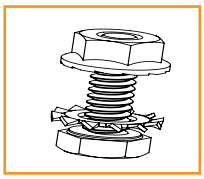
Microinverter Kit US

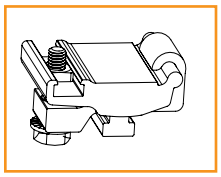
Eclipse

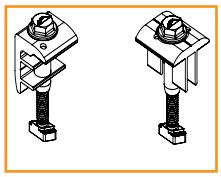
UFO - US
EFO - US

1. PLACE ATTACHMENTS

The general installation method for attachments is to locate a rafter, drill a pilot hole and install the attachment. For composition roof attachments installation instructions refer to page 10. For tile roof attachments refer to page 12. For low slope roof attachments refer to page 14. When using approved third party attachments, refer to manufacturer's install instructions.

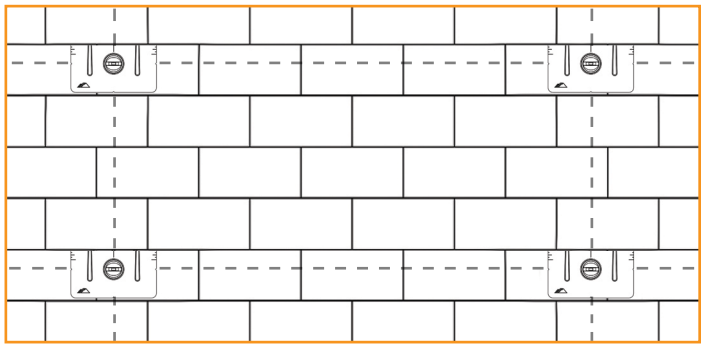

Tested or evaluated third-party roof attachments:

- **S-5! Metal Roof Clamps** - Certification of metal roof clamps includes bonding to both painted and galvalume metal roofs. Follow all instructions and installation practices outlined by S-5! in their Resources Page.

Approved S-5! Metal Roof Clamps
S-5-X - Where "X" can be U, S, E, B, T, Z, Q, H, H90, K700, KHD, K Grip, K Grip Snow, N, N 1.5, R465, or V
S-5-Y Mini - Where "Y" can be U, S, E, B, T, Z, Q, H, H90, K Grip, N, N 1.5, R465, or V.
ProteaBracket, RibBracket, SolarFoot

2. PLACE RAILS

A. CONNECT SPLICES

Use BOSS(Bonded Structural Splice), as needed, to join multiple sections of Rail.

BOSS - Bonded Structual Splice
Insert BOSS into first Rail up until the Stop Tab. Slide second Rail fully into place.

- ► **Rows using BOSS and exceeding 100 of rail for all roof attachments (60 feet when using HUG) must use Expansion Joints.**
- ► **Boss Splices may be installed in any location within a span.**
- ► **UFO and Bonding Hardware must be installed 1" away from the point where two Rails join together.**

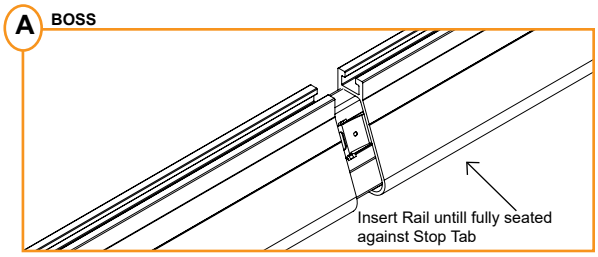

B. PREPARE HARDWARE

Slide square-headed bolts into side-facing rail slot. Space out bolts to match attachment spacing.

- ► **Tape ends of rail, to keep bolts from sliding out while moving.**
- ► **If using T-bolts, carry hardware onto roof and proceed.**

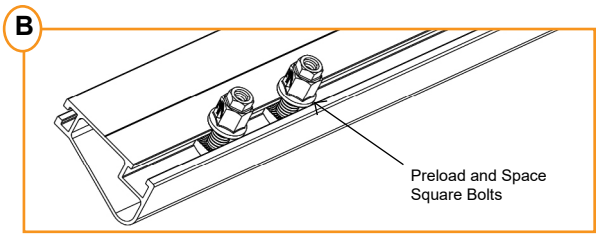

C. ATTACH RAILS

Drop rail with hardware into roof attachment. Level rail at desired height, then torque to **300 in-lbs**.

- ► **Rail can face either upslope or downslope on roof.**
- ► **When using attachments with longer slots, do not install Rail lower than the top of the L-Foot to avoid damage to modules.**

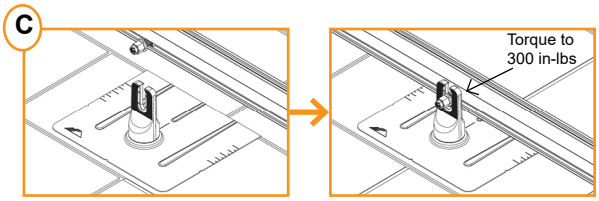

3. SECURE LUGS

Grounding Lugs

Only one Grounding Lug (Rail or Module) required per continuous subarray, regardless of subarray size (Unless frameless modules are used, see Page 20).

► **Grounding Lugs are intended to for use with one solid or stranded copper wire, conductor size 14-4 AWG.**

Rail Grounding Lug

Insert T-bolt in Top Rail slot and torque Hex Nut to **80 in-lbs**. Install a minimum 14 AWG solid copper or stranded grounding wire. Torque terminal screw to **20 in-lbs**.

► **Module Grounding Lugs can be installed anywhere along the Rail and in either orientation shown.**

Module Grounding Lug

Insert Bolt through Manufacturer approved grounding location and torque Hex nut to **60 in-lbs.** One Module Grounding Lug may be installed to one module per row. Install a minimum 14 AWG solid copper or stranded grounding wire. Torque terminal screw to **20 in-lbs**.

► **Refer to module manufactuer for mounting location and instructions.**

Rail Grounding Lug

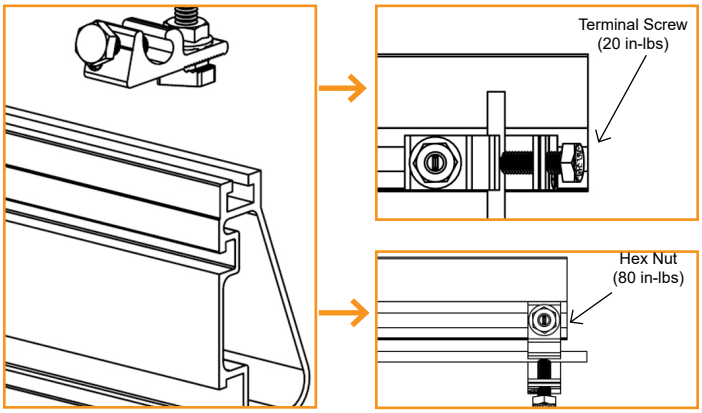

Use with one solid or stranded copper wire, conductor size 14-4AWG.

Module Grounding Lug

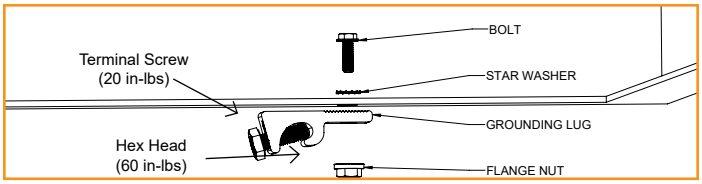

4. SECURE MODULES

A. SECURE FIRST END

Place first module in position on rails, a minimum of 1" from rail ends. Ensure that EFO is held in place while tightening to module. Fasten module to rail using the UFO with stopper sleeve or EFO. Prevent over tourquing and clamp kicking out. Torque to **80 in-lbs**.

► **Ensure rails are square before placing modules.**
► **Hold Clamps on end while torquing to prevent rotation and kicking out.**
► **If using CAMO instead of EFO, refer to Page 7 for CAMO installation procedure.**
► **UFO can be installed on modules 30 to 46mm.**
► **EFO can be installed on modules 30 to 40mm.**

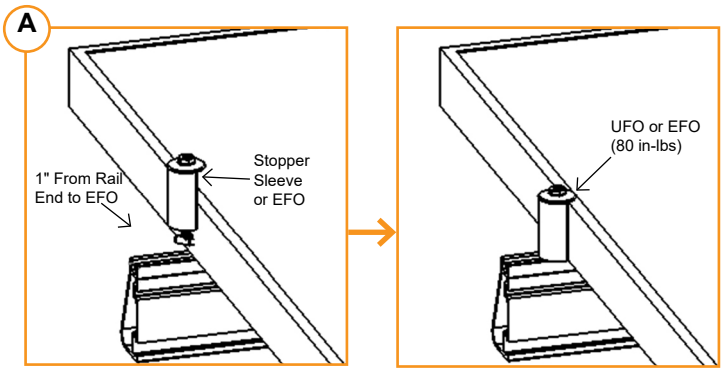

B. SECURE NEXT MODULES

Place UFO into each rail, placing them flush against first module. Slide second module against UFO. Torque to **80 in-lbs**. Repeat for each following module.

► **When reinstalling UFO, move modules a minimum of 1/16" so UFOs are in contact with a new section of module frame.**
► **When UFOs are loosened and re-tightened, ensure UFO T-bolt bottoms out in rail channel before re-torquing UFO to achieve full engagement between T-bolt and rail.**
► **If using Wire Clips, refer to Page 18.**

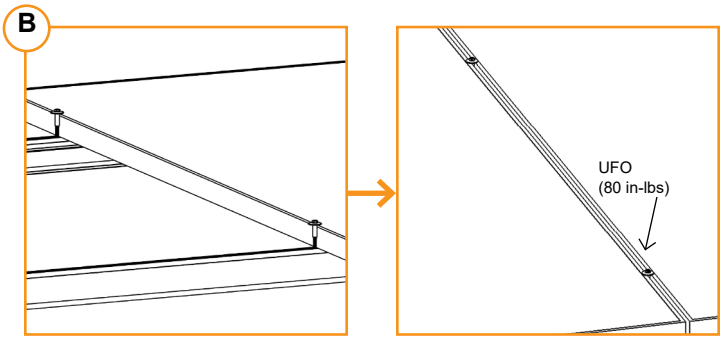

C. SECURE LAST END

Place last module in position on rails, a minimum of 1" from rail ends. Place EFO on rails, ensuring they are hooked over top of module. Ensure EFO maintains position Torque to **80 in-lbs**.

► **Hold clamps on end while torquing to prevent rotation.**
► **Repeat all steps for each following row of modules, leaving a minimum 3/8" gap between rows**
► **If using CAMO instead of UFO + Stopper Sleeve/EFO, refer to Page 7 for CAMO installation procedure.**

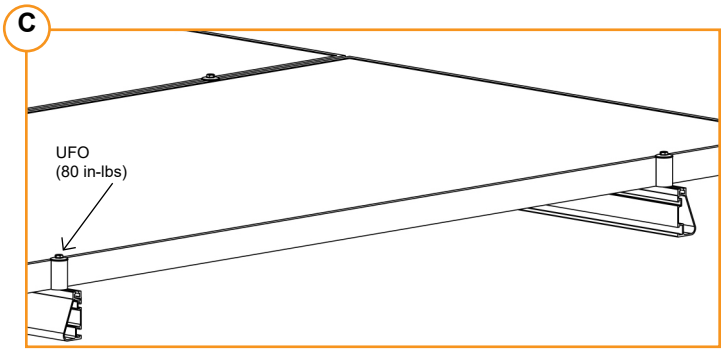

CAMO

A. SLIDE INTO RAIL

Slide CAMO into rail channel far enough to clear the module frame. CAMO requires 6" of clearance from end of rail.

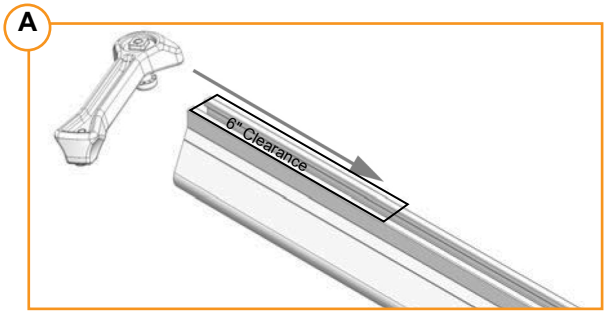

B. PLACE MODULE

Place module on rails (module cells not shown for clarity). When installing CAMO the module can overhang the rail no more than 1/4".

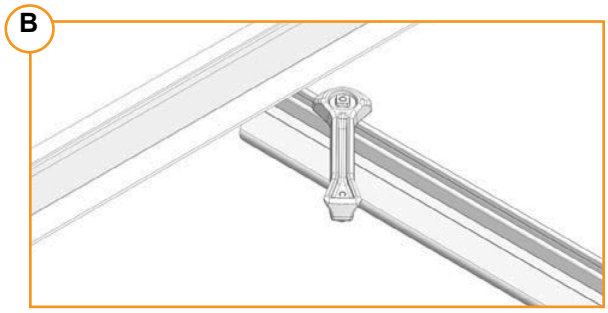

C. PULL TOWARDS END

Pull CAMO towards rail ends, at 45 degree angle, so the bonding bolt contacts the module flange edge.

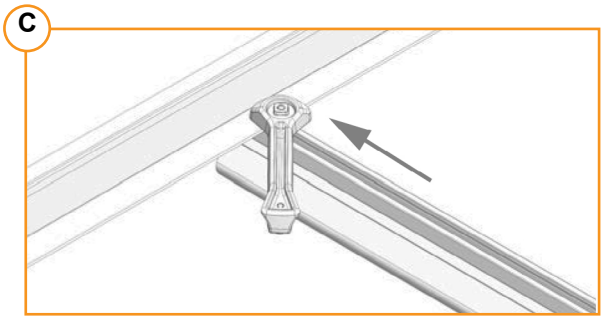

D. SECURE TO FRAME

Rotate handle with an upwards motion until CAMO snaps into rail channel. Ensure CAMO bonding pins are fully seated on top of module frame.

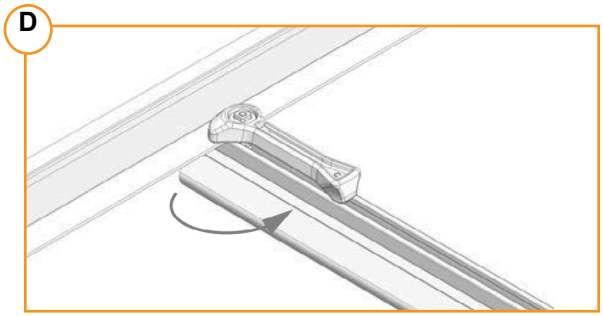

FRAME COMPATIBILITY

CAMO has been tested or evaluated with all modules listed in the Module Compatibility section having frames within the referenced dimensions. Be sure the specific module being used meets the dimension requirements.

- ► **For module manufacturer specific compatibility where applicable, please refer to IronRidge online Design Assistant**

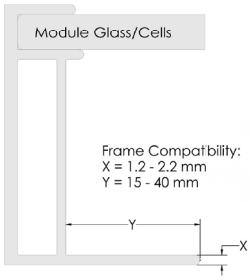

8" BONDING JUMPER

8" Bonding Jumper is an electrical bonding jumper that can be used on the Flush Mount System for row to row bonding; making the module frames the medium for the equipment ground path.

- ► **Bonding jumper is pushed onto the bottom flange of the module.**
- ► **New jumpers should be used if re-installation of jumper is required.**
- ► **Supports bottom flange thicknesses from 1.2mm to 3.1mm.**

A) Align Eclipse and slide into the top channel of the XR Rail far enough to clear the module frame.

- ► Note the head of the bolt should be facing towards the roof.
- ► It's easiest to orient the Eclipse so that the head of the bolt is on the flat side of the rail.

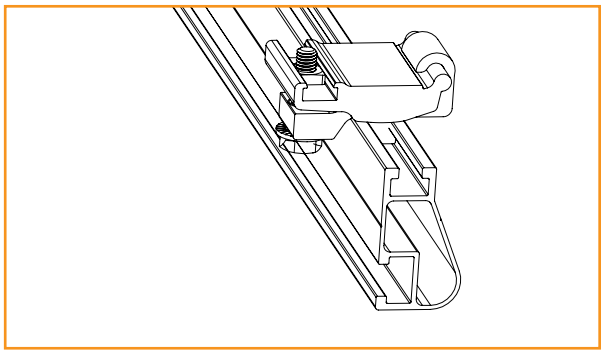

B) Place module on rails, then pull the Eclipse towards the module frame so the upper part of the Eclipse is resting on the module flange

- ► Because of XR's triangular profile, if the Eclipse is oriented so the head of the bolt is on the angled side, a crescent wrench will most likely be needed to tighten the clamp and secure the module.

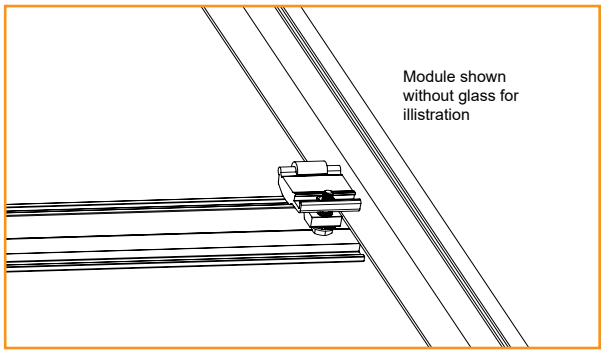

C) Secure the module by tightening the hex bolt with a 7/16" socket to 80 in-lb.

- ► IR Recommends using a cordless ratchet tool for optimal installation speed.
- ► A ratcheting crescent wrench is also a good option.

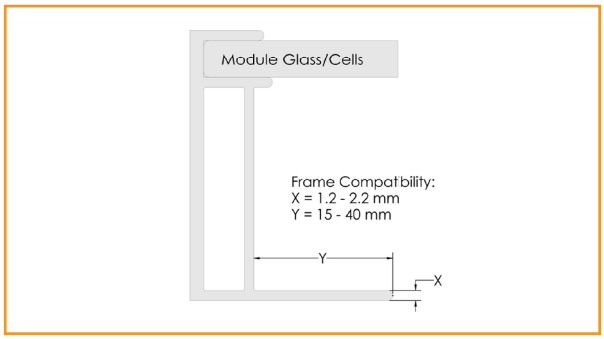

Note: Eclipse does not provide electrical bonding for the module. For standalone module installations, the module and rails shall be grounded.

EXPANSION JOINTS

Expansion Joints are required every 100' of continuous rail to allow for thermal expansion and contraction of the system.

- **Do not install modules over expansion joint.**
- **Expansion Joints are required every 60' of continuous rail when installing on HUG.**

BOSS

Insert BOSS into first Rail up to the Alignment Circle, Slide second Rail over BOSS to the second Alignment Circle, leaving a 1" gap between the Rails.

There must be a 1" of space between the edge of the Rail and the edge of the panel to allow proper installation of the UFO and Stopper Sleeve.

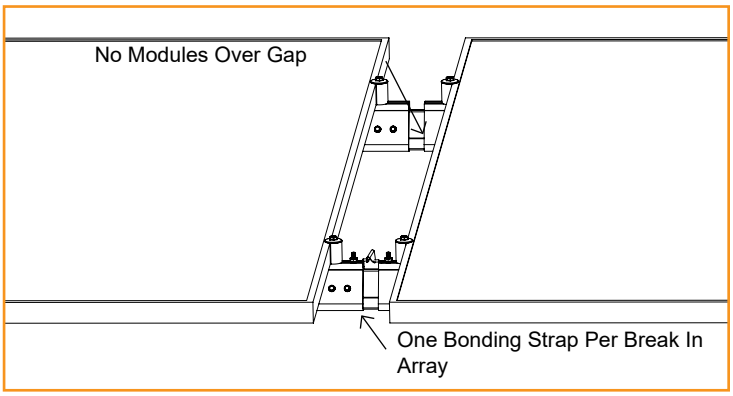

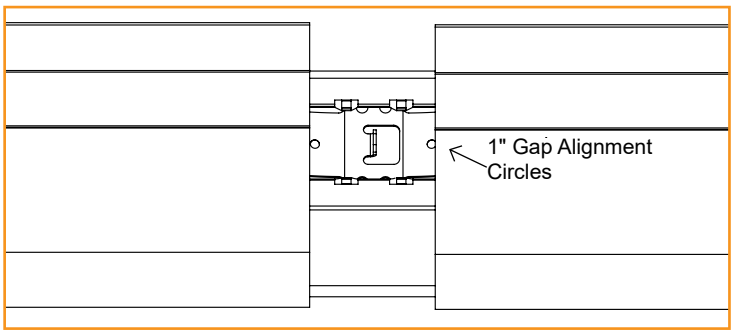

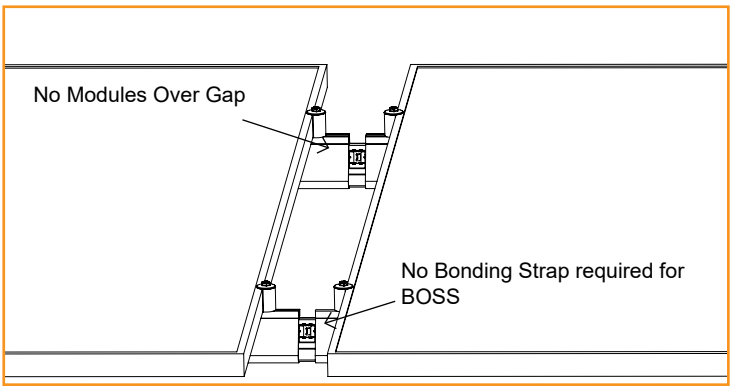

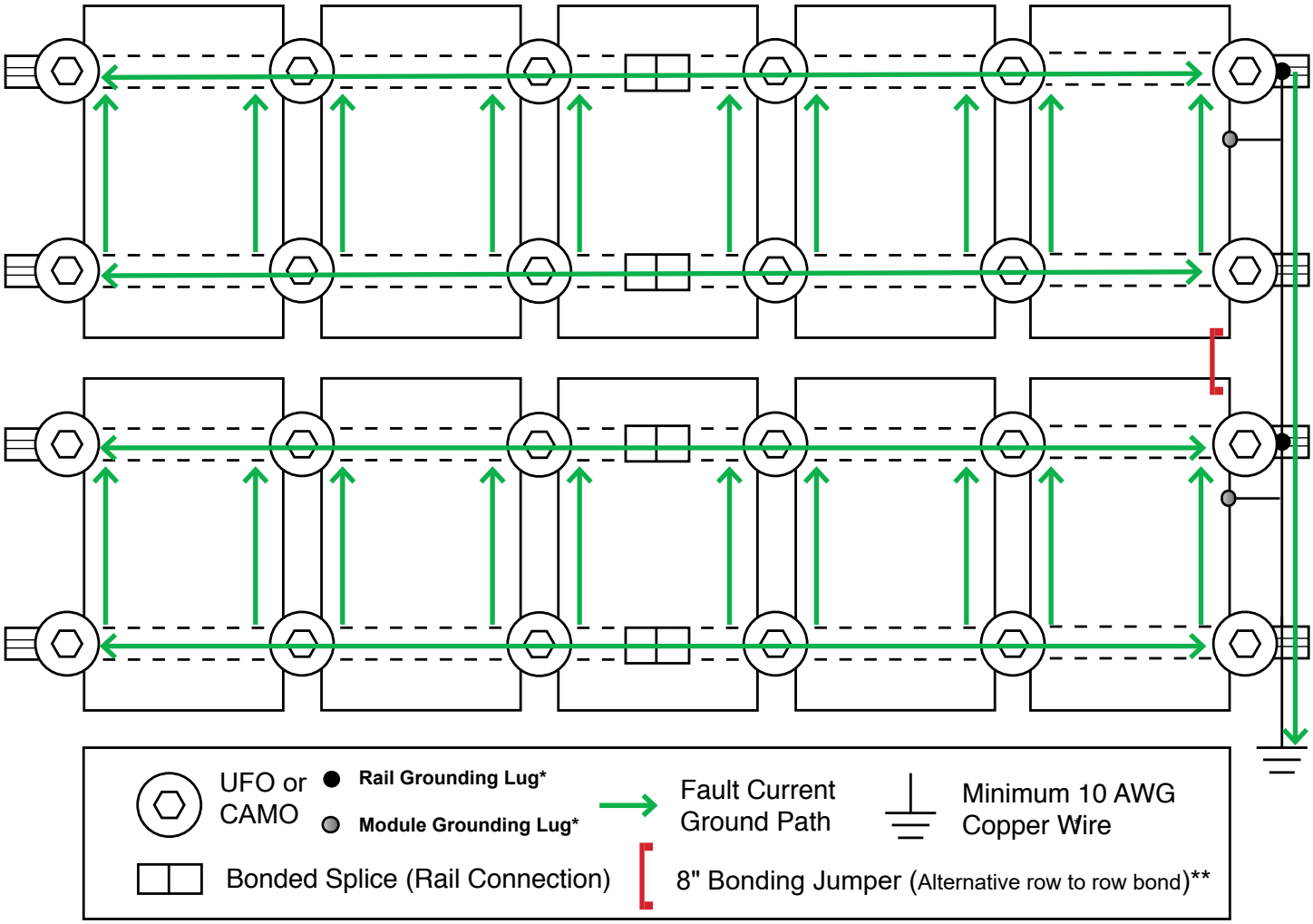

*One Module Grounding Lug or Rail Grounding lug is required per row of a system.

** The use of the 8" Bonding Jumper eliminates the need for row to row bonding. A minimum of one grounding lug per continuous array is required for earth ground.

COMPOSITION SHINGLE

FLASHFOOT2

Locate roof rafters and mark locations on roof. Drill 1/4" pilot holes perpendicular to the roof and back fill with roofing manufacturers' approved sealant. Slide flashing between 1st and 2nd course of shingles, ensuring both that the flashing reaches under the 3rd shingle course and doesn't overhang the downhill shingle course. Line up with pilot hole and insert supplied lag bolt with washer through flashing. With a 7/16" Socket fully seat lag bolt. Place Cap onto flashing in desired orientation for E/W or N/S rails and rotate 180 degrees until it locks into place.

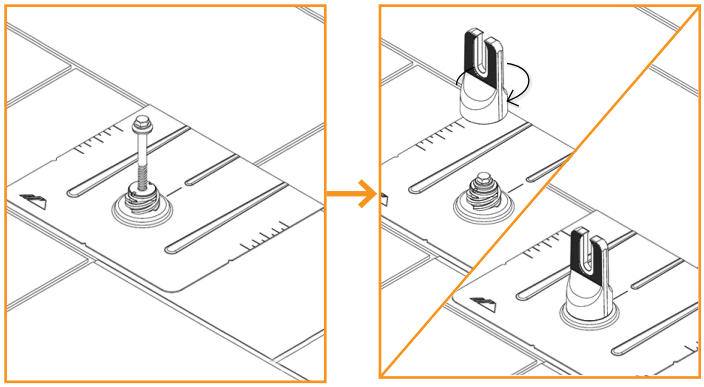

- **Rail can be installed on either side of FlashFoot2 Cap.**
- **For additional details refer to the full FlashFoot2 Installation Manual.**

QM QBASE COMPOSITION MOUNT

Locate roof rafters and mark locations on roof. Align QBase vertical holes over center rafter and mark. Drill two pilot holes with 7/32" drill bit, perpendicular to roof and back fill with roofing manufacturers' approved sealant. Set grade 8 cap screw through bottom of QBase, place QBase over drilled holes and secure lags. Screw Post to QBase. Proceed with roofing up until the flashing should be installed. Install flashing over mount. Allow roofing to proceed to the next course. Apply sealant where post and flashing meet, install EPDM counter flashing collar. Attach L-Foot on Standoff with hardware. Torque to **174 in-lbs (14.5 ft-lbs)**. Attach rail to L-Foot with Bonding Hardware and torque to **300 in-lbs (25 ft-lbs).**

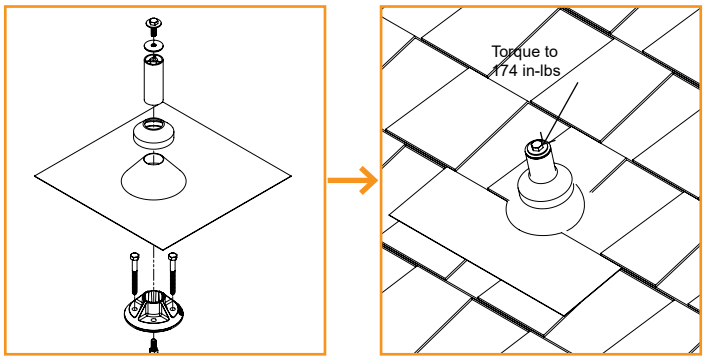

- **For additional details refer to the full QM Installation Manual.**

GF-1 FLASHING

Locate roof rafters and mark locations on roof. Drill 7/32" pilot holes at all attachment points and back fill using roofing manufacturers' approved sealant. Align the flashing hole with pilot hole. Insert the lag screw with pre-installed bonded washer through the L-Foot and Flashing. Tighten the lag screw until fully seated. The EPDM bonded washer ring visual indicator is the most effective way to ensure a watertight seal. Attach rail to L-Foot with Bonding Hardware and torque to **300 in-lbs (25 ft-lbs).**

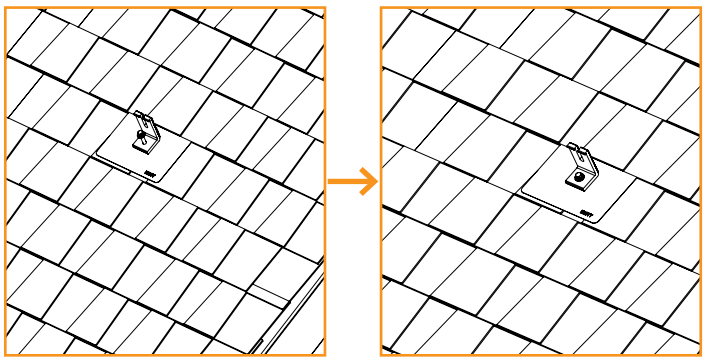

- **For additional details refer to the full QM Installation Manual.**

HUG (RAFTER)

Confirm shingle step does not exceed 1/8”. Locate and mark centers of rafters to be mounted. Select the courses of shingles where mounts will be placed. Peel off release liner. Align HUG horizontally using the shingle edge or chalk line with the alignment grooves on the mount. Once in desired location, lightly press against roof to preliminarily hold the mount in place. Drive RD Structural Screw using 5/16” socket, ensuring that two screws are correctly installed into the center of the rafter. Drive screws until fully seated.

- **Rail can be installed on either side of HUG.**
- **For complete installation requirements and limitations, please refer to the HUG Installation Manual.**
- **HUG is only approved for installation with IronRidge RD Structural Screws.**
- **HUG cannot be installed between courses.**

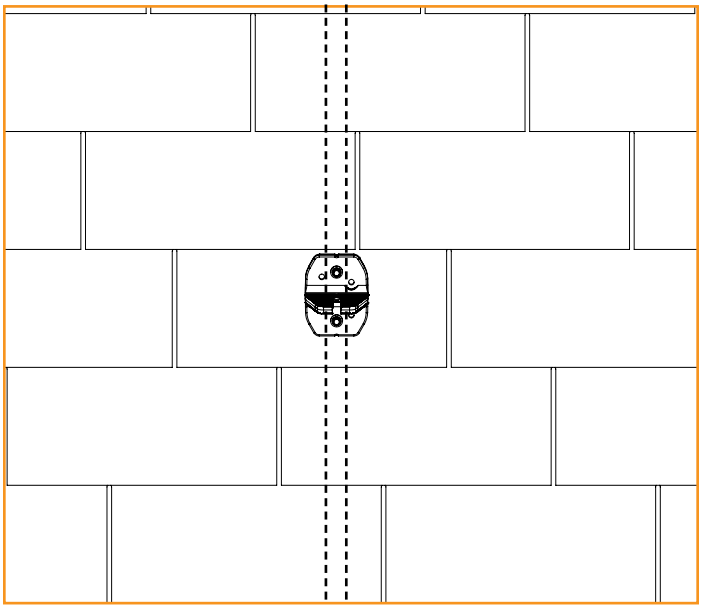

HUG (DECK)

Confirm shingle step does not exceed 1/8”. Locate and mark attachment loactions. Select the courses of shingles where mounts will be placed. Peel off release liner. Align HUG horizontally using the shingle edge or chalk line with the alignment grooves on the mount. Once in desired location, lightly press against roof to preliminarily hold the mount in place. Drive screws using 5/16” socket, until fully seated. All 6 RD Structural Screws must be used in deck mounted conditions.

- **Rail can be installed on either side of HUG.**
- **For complete installation requirements and limitations, please refer to the HUG Installation Manual.**
- **HUG is only approved for installation with IronRidge RD Structural Screws.**
- **Rows of rail exceeding 60 feet require a thermal expansion joint when using HUG.**

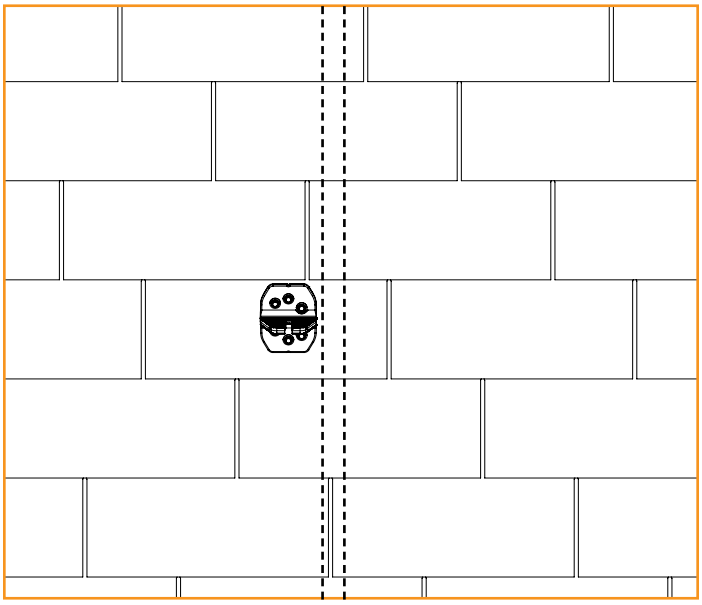

TILE

KNOCKOUT TILE

Remove tile and mark rafter. Use base as guide to drill 1/4” pilot hole and fill with roofing manufacturer’s approved sealant. Install optional Roof Flashing and seal appropriately. Insert lag bolt with bonded washer through base (and flashing if used) and drive until fully seated. Insert Tile Replacement Flashing, lower onto base and apply pressure over the threaded post until it dimples the flashing. Place L-Foot over dimple and tap with hammer to punch threaded post through the flashing. Ensure punched pieces of flashing are cleared away. Form flashing as needed to sit flush with surrounding tiles, position L-Foot in desired orientation and torque hardware to **132 in-lbs (11 ft-lbs)**. Attach rail to L-Foot with Bonding Hardware and torque to **300 in-lbs (25 ft-lbs)**.

- **Base can be installed in any orientation relative to rafter.**
- **Ensure L-Foot does not extend above rail.**
- **Optional deck level flashing is available. Standalone installation manual available on website**
- **Standalone Knockout Tile manual available on website.**

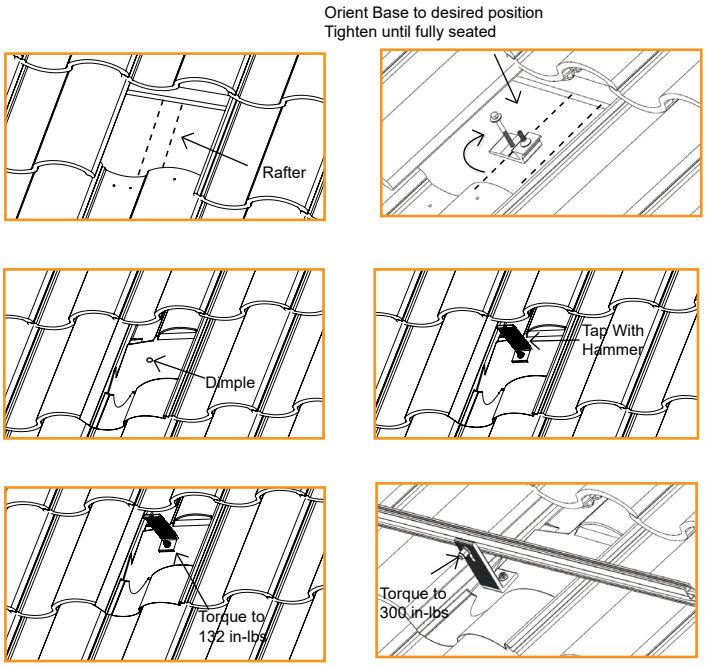

ALL TILE HOOK

Remove tile and mark rafter. Position base over rafter, adjust arm if necessary and torque hardware to **132 in-lbs (11 ft-lbs)**. Use base as guide to drill 1/4" pilot holes, back fill with roofing manufacturer’s approved sealant, then insert lag bolts and tighten until fully seated. Replace tiles and notch as necessary to ensure proper fit. Attach rails to either side of slot using Bonding Hardware and torque to **300 in-lbs (25 ft-lbs)**.

- **Position arm near the center of valley for curved tiles.**
- **Position arm away from seam of joining flat tiles.**
- **Ensure top of hook does not extend above rail.**
- **Standalone All Tile Hook manual available on website.**

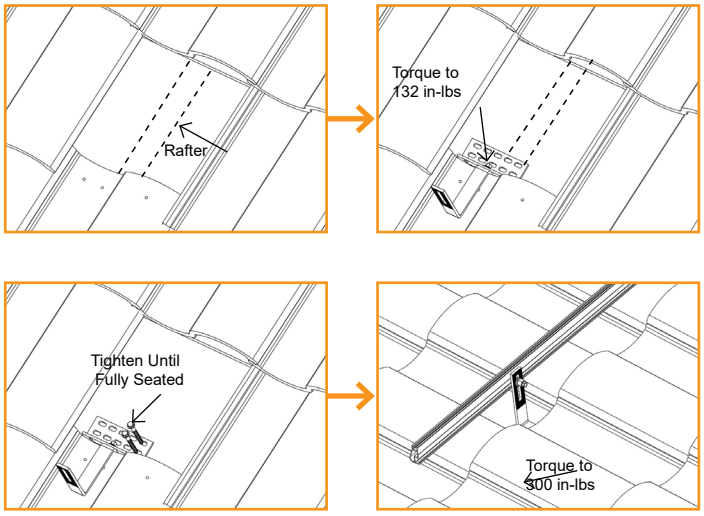

FLAT TILE FLY

Remove flat tile and mark rafter. Position base over rafter, adjust arm if necessary and torque hardware to **144 in-lbs (11 ft-lbs)**. Use Flat base as guide to drill 1/4" pilot holes, back fill with roofing manufacturer’s approved sealant, then insert lag bolts and tighten until fully seated. Replace tiles and notch as necessary to ensure proper fit. Attach rail to L-Foot with Bonding Hardware and torque to **300 in-lbs (25 ft-lbs)**.

- **If arm lands on seam of joining flat tiles Aire ATH may be used instead.**
- **Ensure top of hook does not extend above rail.**
- **Standalone Flat Tile Hook Manual available on website.**

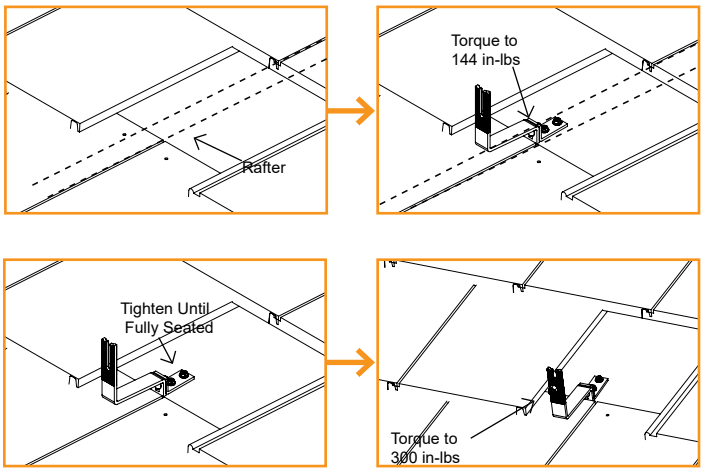

TILE

QM QBASE UNIVERSAL TILE MOUNT

Remove tile and mark rafter. Measure up 6 5/8" from bottom of tiles and mark horizontally. Align QBase over rafter center and drill two 7/32" pilot holes, back fill with roofing manufacturers' approved sealant. Place grade-8 Cap Screw under QBase, lag QBase into rafter location. Install Sub-flashing, waterproof at underlayment level according to roofing manufacturers' instructions and the Tile Roofing Industry Alliance guidelines. Cut tile with diamond blade to allow post to pass through. Place tile in position and then install Post. Install 18"x18" flashing, pre-bent to follow the contour of the tile as required. Apply sealant where Post and Flashing meet and install EPDM counter flashing. Attach L-Foot on Standoff with hardware. Torque to **174 in-lbs (14.5 ft-lbs).** Attach rails to L-Foot using Bonding Hardware and torque to **300 in-lbs (25 ft-lbs)**.

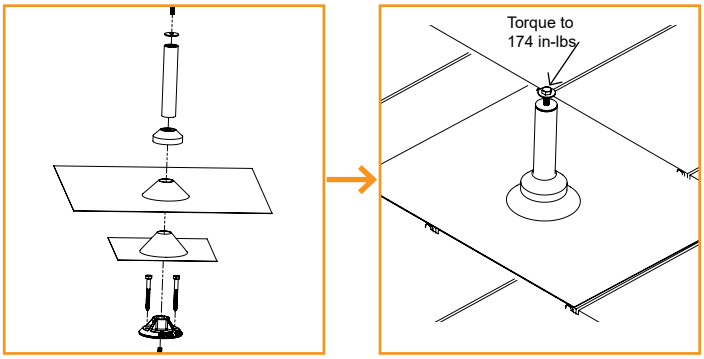

► **For additional details refer to the full QM Installation Manual.**

ADDITIONAL ROOF TYPES

QM QBASE METAL, SHAKE AND SLATE

The QM QBase can be used to install on multiple roofing types with different installation methods.

► **For instructions on installing the QBase on Slate refer to the full QM Installation Manual.**

► **For instructions on installing the QBase on Shake refer to the full QM Installation Manual.**

► **For instructions on installing the QBase on Metal Shingle refer to the full QM Installation Manual.**

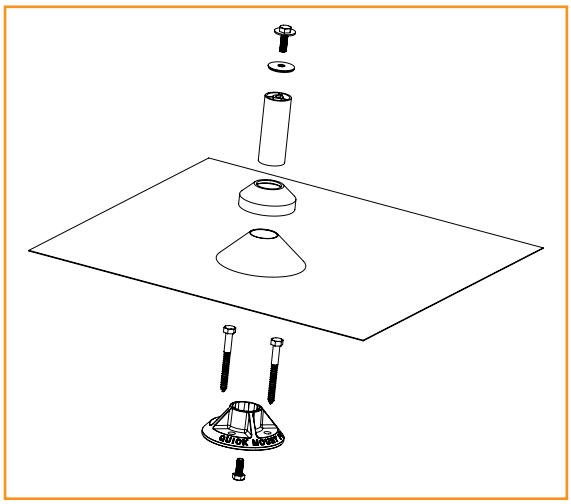

LOW SLOPE ROOFS

SIMPLE GRIP

The QM SimpleGrip is used to install on multiple roofing types with different methods and screw configurations.

Attach L-Foot on SimpleGrip with hardware. Torque to **140in-lbs (12 ft-lbs).** Attach rails to L-Foot using Bonding Hardware and torque to **300 in-lbs (25 ft-lbs)**.

► **For instructions on installing the QM SimpleGrip please refer to the full QM Installation Manual.**

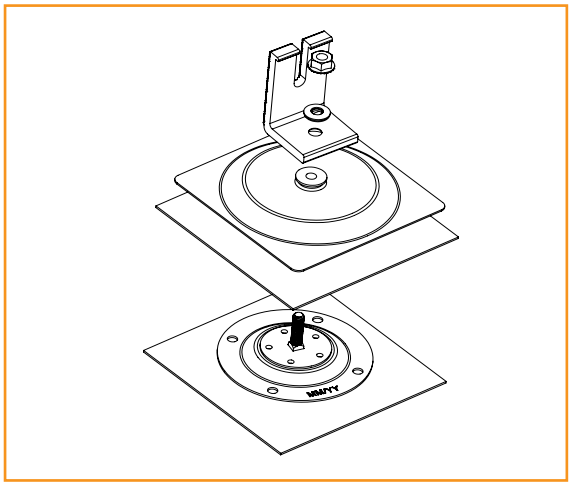

LOW SLOPE ROOFS

FLAT ROOF ATTACHMENT

Flat Roof Attachment can be used with an L-foot for flush mounting modules on low sloped roofs. Mark locations for Flat Roof Attachment. Screws should be installed symmetrically to each other. If using a membrane flashing, remove the silicone washer's protective liner prior to attaching the membrane. Attach L-foot with washers and 3/8” hardware torqued to **250 in-lbs (21 ft-lbs)**. Seal attachment and/or membrane per roofing manufacturer’s requirements.

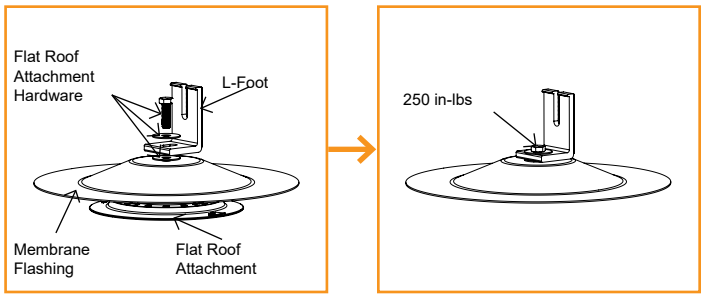

- ► **Type, size, and quantity of roof screws to be specified by Structural Engineer. Fastener size not to exceed #15.**
- ► **Membrane flashing available for TPO, PVC, and KEE roofs. Ensure membrane flashing is compatible with existing roofing material.**
- ► **If membrane flashing is not used, only washer on top of L-Foot is required.**
- ► **Standalone Flat Roof Attachment Manual available on website.**

QM QBASE MOUNT

Locate the desired mount placement over a rafter. Using the base as a template, mark the two penetration points. Drill two 7/32" pilot holes, back fill with roofing manufacturers' approved sealant. Place the grade-8 hex bolt in the bottom of the base and screw the Post. Attach L-Foot on Standoff with hardware. Torque to 1**74 in-lbs (14.5 ft-lbs).** Attach rail to L-Foot with Bonding Hardware and torque to **300 in-lbs (25 ft-lbs).**

The mount can be flashed with available 9", 12" or 18" aluminum flashings, pitch pocket or curb, or with a membrane cone flashing. If using a membrane flashing utilize the services of a qualified roofer

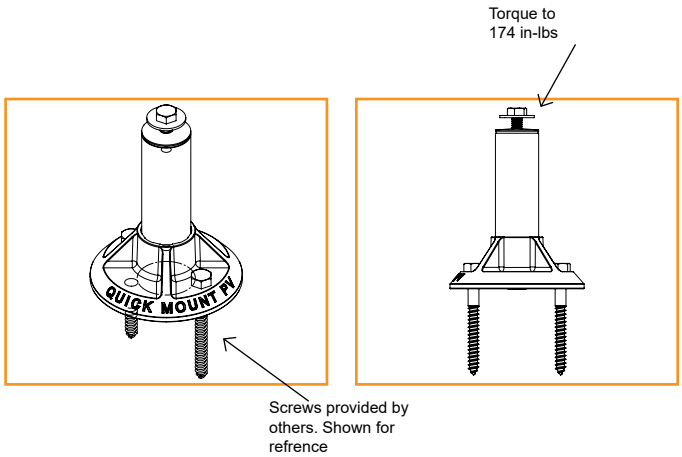

- ► **For additional details refer to the full QM Installation Manual.**

METAL ROOF

QM LYNX

Locate the desired mount placement over a roofing seam, make sure block is fully seated on metal seam. Torque Set Screws to **150 in-lbs(12.5 ft-lbs)** using 3/16" Hex Drive, alternate driving each bolt till required torque is met. Slide Hex Bolt into slot and to desired position. Place rail attachment bracket over Hex Bolt and secure with Flange Nut, torque Flange Nut to **150 in-lbs(12.5 ft-lbs)** using 1/2" socket.

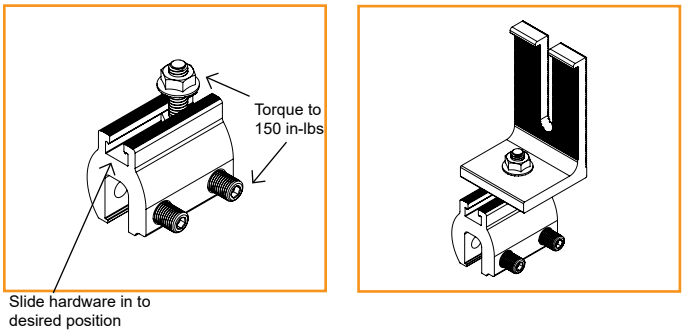

- ► **For additional details refer to the full QM Installation Manual.**
- ► **Certification of Lynx calmp includes bonding to both painted and galvalume metal roofs.**
- ► **The technology in this product is licensed by S-5!**

CORRUSLIDE

The Corruslide is used to install on almost all corrugated metal roofs. Follow instructions in the installation manual for spacing and location inscrutions.
Place rail attachment bracket over Hex Bolt and secure with Flange Nut, torque Flange Nut to **150 in-lbs(12.5 ft-lbs)** using 1/2" socket.

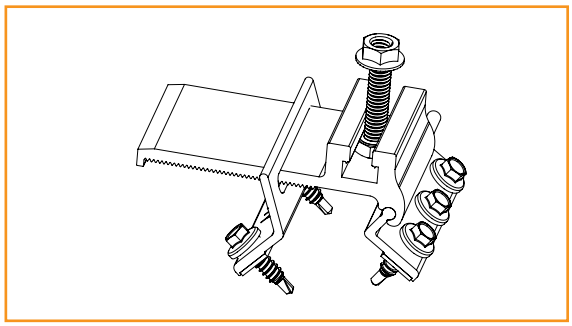

- ► **For instructions on installing the QM Coroslide please refer to the full QM Installation Manual.**

QM CONDUIT PENETRATION FLASHING - COMP SHINGLE

Mark a drill point so that the flashing reaches up to the 3rd shingle course. Drill your conduit hole next to the rafter so you can secure the conduit below the roof surface. Cut shingle and remove nails as needed to center the drilled hole and flashing hole. Apply roofing manufacturer's approved sealant on the underside of the flashing in a Upside down U and to top of flashing. Under the 3rd course and through the second course secure flashing with 2 roofing nails, apply sealant over the nail heads. Cut EPDM collar to appropriate size. Apply a bead of sealant compatible with the roofing manufacturer and EPDM rubber to anywhere the EPDM collar contacts.

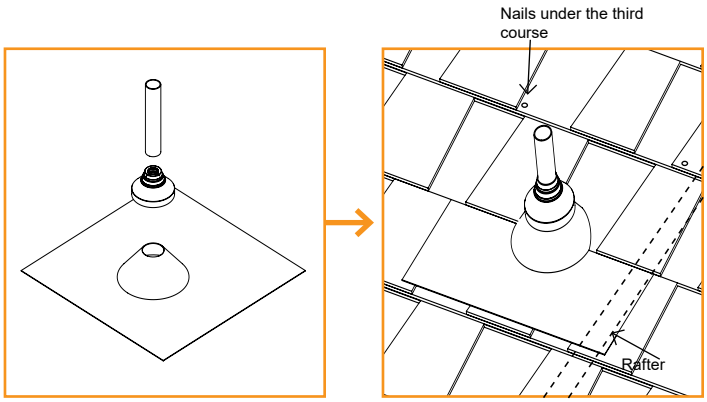

- ► **Be sure to secure conduit to rafters below the roof surface per local building codes and NEC code requirements.**
- ► **Cut EPDM collar to appropriate size using the sizing chart in the installation manual, approved for 1/2" to 1" EMT.**
- ► **For additional details refer to the full QM Installation Manual.**

QM CONDUIT PENETRATION FLASHING - TILE

Drill your conduit hole next to the rafter so that you can secure the conduit below the roof surface. Apply roofing manufacturer approve sealant to the underside of the sub-flashing in the shape of an upside down U. Clear away any dust and debris to install sub-flashing. Waterproof at under laminate level according to roofing manufacturer instructions and Tile Roofing Institute Guidelines. Under the top layer of felt, secure the sub-flashing with two roofing nails. Cut EPDM collar to appropriate size. Apply a bead of sealant compatible with the roofing manufacturer and EPDM rubber to anywhere the EPDM collar contacts. With a diamond blade cut tile to allow conduit to pass through, replace all tiles. Bend the flashing to follow the contour of the tiles. Place flashing over the conduit and tuck up under the next course of tiles. Apply a bead of sealant compatible with the roofing manufacturer and EPDM rubber to anywhere the EPDM collar contacts. Slide collar onto conduit all the way down to the flashing.

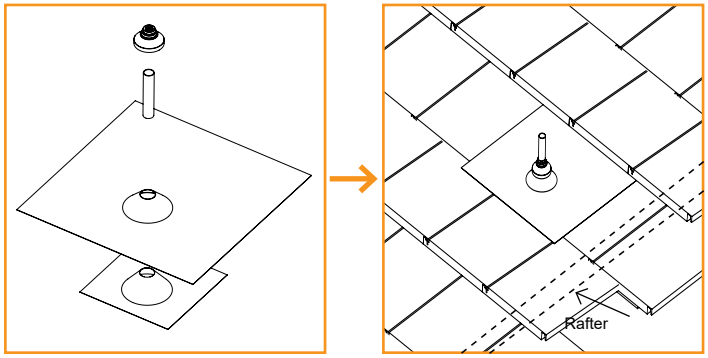

- ► **Be sure to secure conduit to rafters below the roof surface per local building codes and NEC code requirements.**
- ► **Cut EPDM collar to appropriate size using the sizing chart in the installation manual, approved for 1/2" to 1" EMT.**
- ► **For additional details refer to the full QM Installation Manual.**

CONDUIT MOUNT

QM CONDUIT MOUNT - COMPOSITION SHINGLE

Place conduit mounts along path of conduit. Lift shingle above mount location and insert flashing into position. Mark center for drilling, remove flashing and drill pilot hole with 1/8" bit. Clean area, fill hole with roofing manufacturer's approved sealant. Lift shingle and slide Conduit Mount into place. Prepare the lag bolt with sealing washer and pipe clamp (not included). Insert lag through hole in block and drill with 7/16" socket until block is tight.

- ► **Install mounts as required to support conduit across the roof.**
- ► **For additional details refer to the full QM Installation Manual.**

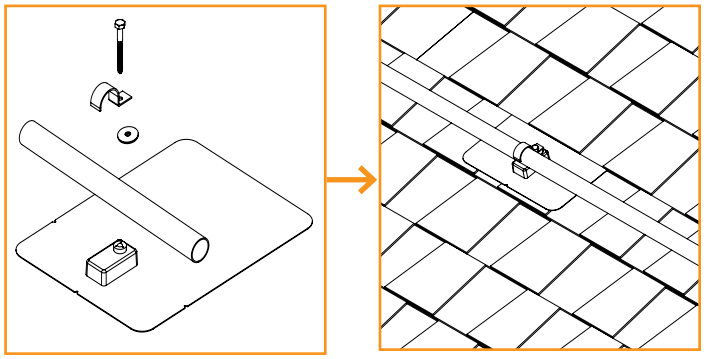

QM BUG - COMPOSITION SHINGLE

Place BUG conduit mounts along path of conduit. Clean area, place mount and drive RD Structural Screw using 5/16” socket. Prepare the Tri-lobe Screw and pipe clamp (not included). Insert screw in an unused hole in block and drill with 5/16" socket until screw is tight.

- ► **Install mounts as required to support conduit across the roof.**
- ► **For additional details refer to the full QM Installation Manual.**

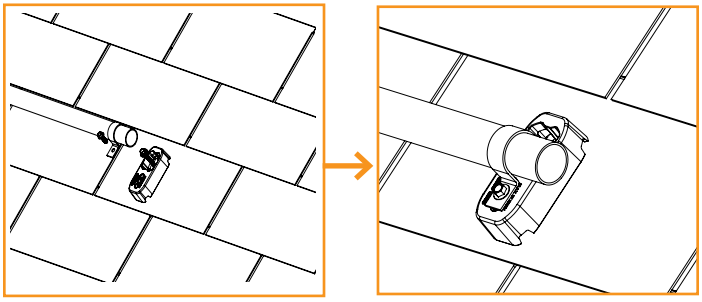

END CAPS

End Caps add a completed look and keep debris and pests from collecting inside rail.

Firmly press End Cap onto rail end.

- ► **End Caps come in sets of left and right. Check that the proper amount of each has been provided.**

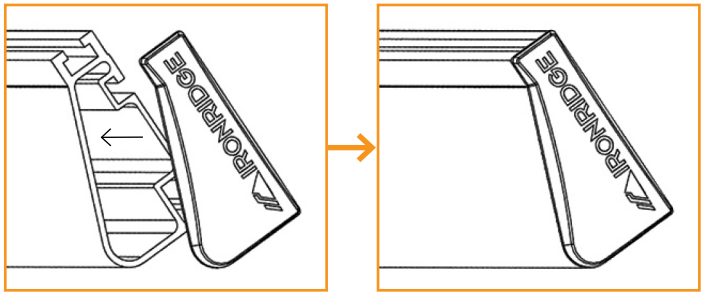

WIRE CLIPS

Wire Clips offer a simple wire management solution.

Firmly press Wire Clip into top rail slot. Run electrical wire through open clip. Snap closed once all wires have been placed.

► Wire Clip fits up to quantity 10 - 10 AWG PV Wire or equivalent bundled diameter.

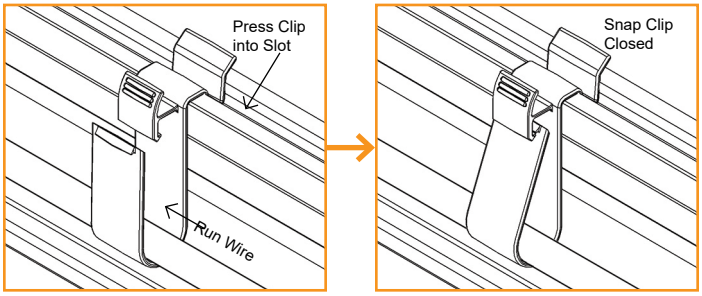

JAYBOX

A.
Prior to installation, use step drill bit to place pass through holes for conduits or water-tight connectors. Drill bit starter locations are provided on the sides and front of enclosure.

► **Do not install conduit facing up roof.**

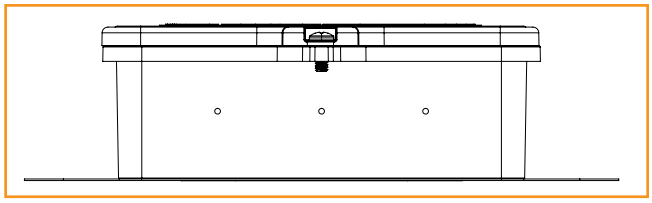

B (Rail).
Use rail-specific MLPE mounting hardware to attach Rail Hangers to rail. Ensure junction box is pushed as close to the rail as possible. Torque to 80-in lbs (1/2" or 7/16" socket).

► **Do not overtighten**
► **If installing in areas with ground snow loads greater than 40 psf, install JayBox under module directly next to module frame edge.**

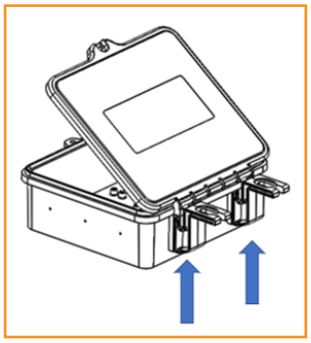

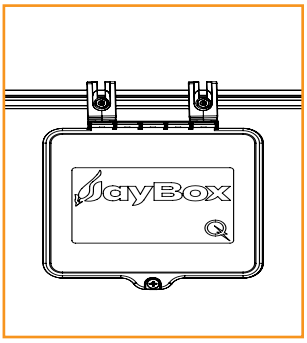

B (Shingle).
Align sealing oval of box to align with mating feature on flashing. An EPDM foam gasket is pre-installed to the underside of the junction box to seal the flashing to the box without the need for additional sealant. Secure with supplied #12 x 1-¾" deck screws (2x) until the junction box is pulled tight to the flashing. Do not over-tighten screws to avoid stripping screws in OSB.

► **If installing pass through fittings, ensure that the JayBox and roof deck are both properly prepared. Complete installation process before attaching the Jaybox to the deck.**
► **Do not install JayBox under shingle seam as illustrated below.**

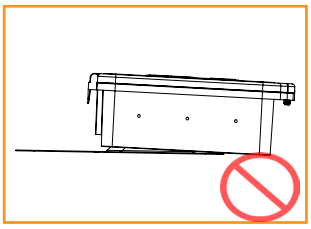

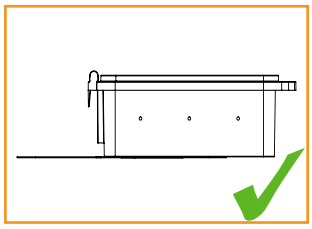

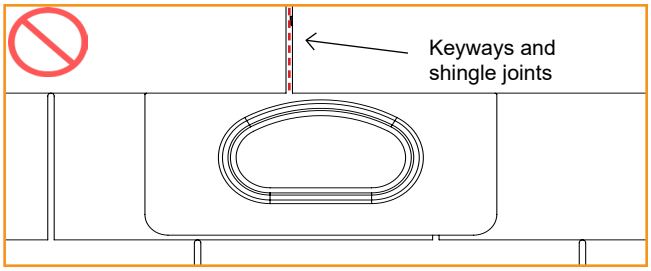

C.
Install wiring, conduit and fittings per NEC requirements and following local AHJ guidance.
Using Philips Head Driver tighten the bolt.

► **For additional details refer to the full QM Installation Manual.**

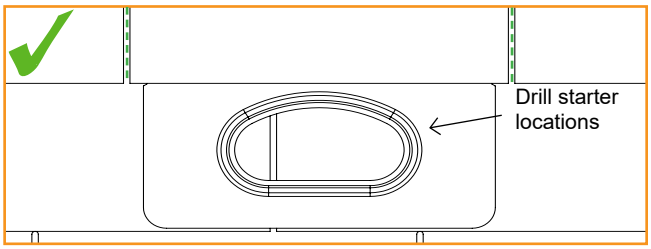

MICROINVERTER KITS

Use IronRidge's Microinverter Kit to bond compatible microinverters and power optimizers to the racking system. Insert Microinverter Kit T-bolt into top rail slot. Place compatible microinverter or power optimizer into position and tighten hex nut to **80 in-lbs**.

- ► **MLPE devices shall be installed near modules frames whenever possible.**

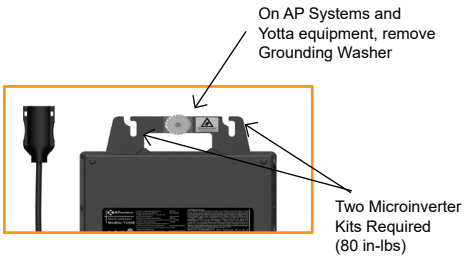

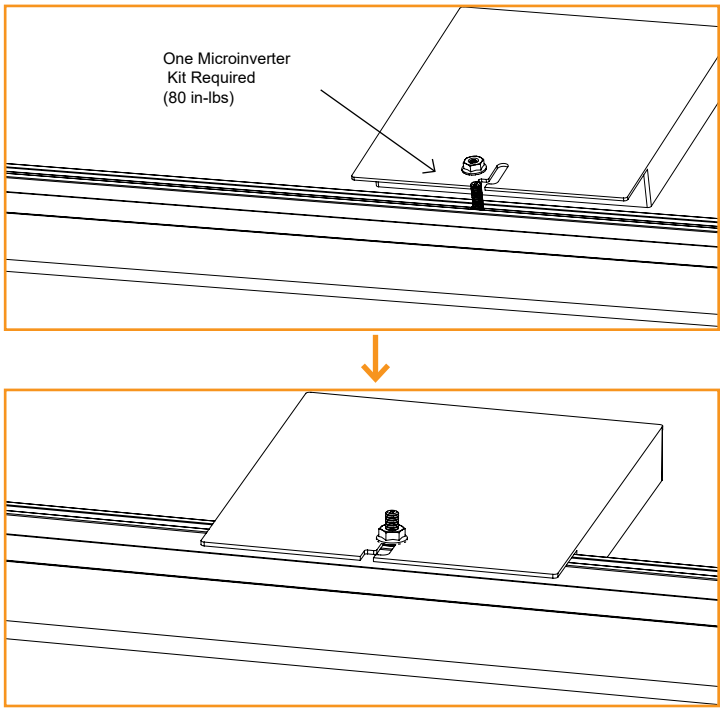

- ► **Remove Grounding Washer on AP Systems QS1, QS2, QT2, DS3 and YC600 and Yotta inverters before installing to XR rails.**
- ► **Remove the Stainless Steel Clip on Tigo-"A" MLPE Devices before attaching to XR rails.**
- ► **Do not remove clips from AP systems Rapid Shutdown Devices.**
- ► **Use the number of IronRidge Microinverter kits allowed by the MLPE mounting flange. Some will require 1 kit and others 2 kits.**

SYSTEMS USING MICROSTORAGE PRODUCTS

Use IronRidge's Microinverter Kit to bond compatible microstroage devices to the racking system. Insert Microinverter Kit T-bolt into top rail slot. Place compatible microstorage into position and tighten hex nut to **80 in-lbs**. Or install Bonding hardware into side slot and tighten Hex Nut to **300 in-lbs.**

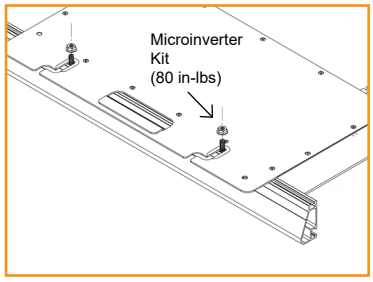

COMPATIBLE PRODUCTS

PHAZR

PHAZR Devices PHAZR-X, where X is 6-12.

Solpad

Solpad Inverter model SI-1k
Solpad Battery Storage model SB-2K
Solpad Junction Box model SJB-4k

Yotta

YB-1

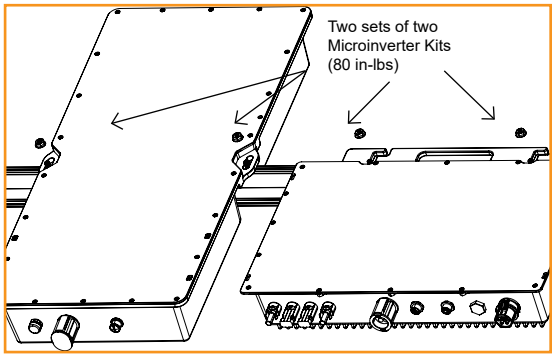

- ► **Running a separate equipment grounding conductor to the PHAZR or Solpad devices is not required.**
- ► **If installing in areas with ground snow loads greater than 40 psf and underneath a module, install PHAZR and Solpad devices as close as possible to module frame edge.**
- ► **Solpad may only be installed on XR-100 and XR-1000**
- ► **Solpad may only be installed with modules having a frame thickness of 35mm or greater.**
- ► **Use the number of IronRidge Microinverter kits allowed by the microstorage mounting flange. Some will require 1 kit and others 2 kits.**
- ► **Yotta YB-1 may only be installed on XR-1000.**
- ► **Yotta YB-1 requries use of the Yotta 310-00132 Bracket with 2 XR Bonding Hardware on XR-1000 Rail. It is reccomended to install the device as close as possible to attachments.**
- ► **For complete instructions refer to Yotta Installation Manuals**

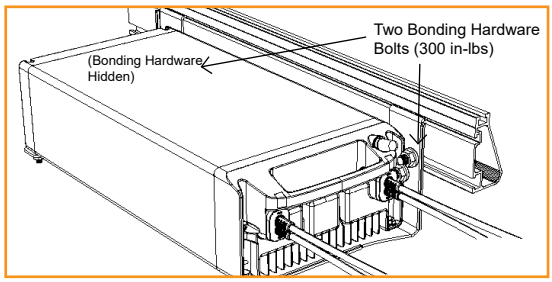

XR MLPE MOUNT APPROVED MLPE

AP Systems	DS3, DS3-H, DS3-L, DS3-S, QS1, QS2, QT2, QT2-208, QT2-480 and YC600 Rapid Shutdown Devices: RSD-S-PLC and RSD-D-20* *Frame mount only. Do not remove clip
Darfon	MIG240, MIG300, G320, G640
Duracell	D350-M1, D350-M1A-xxx, D400-M1A-xxx, D600-M2A-xxx, D700-M2, D800-M2A-xxx, D1500-M4 Where "xxx" can be blank, 208A or 240A
Enphase	M250-72, 250-60, M215-60, C250-72, S230, S280, IQ 6, IQ 6+, IQ7, IQ 7A, IQ 7+, IQ7 PD, IQ 7X, Q Aggregator; IQ8-60, IQ8PLUS-72, IQ8A-72, IQ8AC-72, IQ8H-3P-72, IQ8H-208-72, IQ8H-240-72, IQ8HC-72, IQ8M-72, IQ8MC-72, IQ8P-72, IQ8P-3P-72, IQ8X-80, IQ9N; may be followed by -A-US, -A-DOM-US, -3P-277-A-US,-3P-277-A-DOM-US, -2-US, -E-US, -M-US, or M-DOM US
Generac	S2502, PM-820
Hiitio	HCM300/400/500SN HCM300/400/500WN HCM600/800/1000SN HCM600/800/1000WN HCM1600/1800/2000SN HCM1600/1800/2000WN
Hoymiles	HMA-xxxYY-ZZ where "A" can be blank or S, xxx can be 300, 350, 400, 450, 500, 600, 700, 800, 900, 1000, 1200, 1500, 1600, 1800 or 2000; "YY" can be NT, 1T, 2T, 4T; and "ZZ" can be blank, NA or 208-NA
Hyxi Power	HYX-M300/400/500-S-NA HYX-M300/400/500-SW-NA HYX-M600/800/1000-S-NA HYX-M600/800/1000-SW-NA HYX-M1600/1800/2000-S-NA HYX-M1600/1800/2000-SW-NA
Hyxi Power	HYX-M600-S-NA, HYX-M600-SW-NA, HYX-M800-S-NA, HYX-M800-SW-NA, HYX-M1000-S-NA, HYX-M1000-SW-NA
Lunar Energy	Maximizer 10-005220 or 10-00522D
NEP Microinverters	BDM-xxx-yyy Where "xxx" can be 300, 300X2, 350, 400, 500, 550, 650, 800, 1000, 1200, 1600 or 2000; and "yyy" can be blank, 208A or 240A
NEP Rapid Shutdown	PVG-1, PVG-2, PVG-3, PVG-4
SMA	RoofCommKit-P2-US, TS4-R Module Retrofit Kits (TS4-R-S, TS4-R-O, TS4-R-F)
Solar Edge	C651U, C652U, M1600, P300, P320, P340, P370, P400, P401, P405, P485, P505, P600, P700, P730, P750, P800p, P800s, P801, P850, P860, P950, P960, P1100, P1101, S440, S500, S500B, S650B, S1200, S1201, U650 and U650B
Spitzer Energy	SPZ-M800-S, SPZ-M1000-S
Tigo	Tigo Access Point (TAP) TS4-R-X (where X can be F, M, O, or S) TS4-R-X-DUO (where X can be M, O, or S) TS4-A-X, TS4-X-F, TS4-X-O, TS4-X-S (where X can be F, 2F, O, O-DUO, or S)
Yotta	DPI 208/480

Install Contour

Install Contour on a completed array.

A. Start by placing Contour Clamp on module frame within 12 inches of the down roof corner of the array. Each piece of 84" Contour Trim must be suppported by two Clamps. Clamps must be installed in the 12" clamping zones at edge of trim. Once trim is placed and in position, secure trim by tightening Clamp set screw to **80 in-lbs**.

B. Multiple Contour pieces can be joined using Contour Splice. Install Splice on exsisting Contour edge and install Clamps in appropriate clamping zones for next piece of trim. Place trim on Clamps, slide into splice to join two pieces together. Secure Contour by tightening Clamp set screw to **80 in-lbs**. Repeat as needed across the array.

C. Cut trim to line up with edge of array.

D. Install Clamps within clamping zones on side of array. Install second Clamp as needed up array. Place Corner Cap on trim and slide side trim to align with Cap. Repeat as needed along roof for both inside and outside corners.

E. Use optional End Caps to cover any exposed edges of Contour as desired.

- ► **Do not install on side of array facing roof peak.**
- ► **Contour can be installed with 1 clamp if trim section is 12" long (or shorter) and has a splice attached on one end, on which the section of trim the 12" section is spliced to also has 2 clamps.**
- ► **Contour Trim when installed when installed up roof requires the use of Aire Stealth Clamps.**
- ► **Wind Speed: no restrictions**
- ► **Ground Snow: up to 90 PSF**

A.

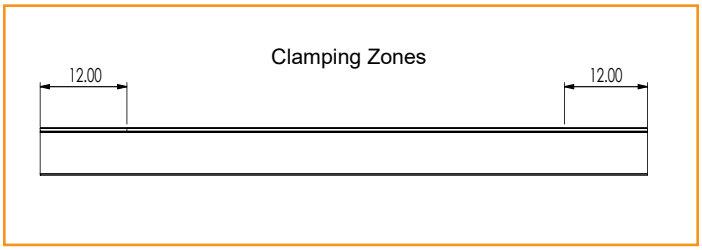

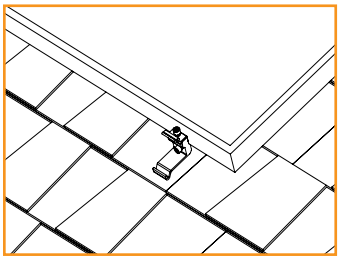

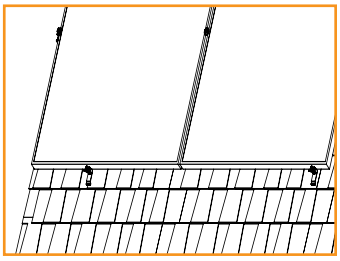

B.

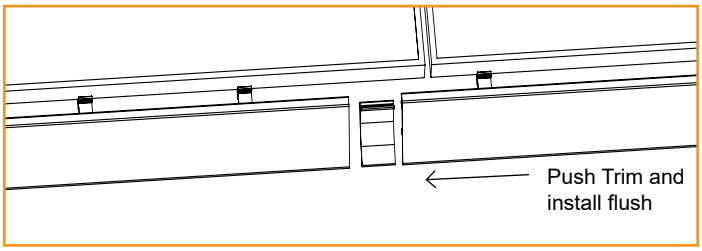

C.

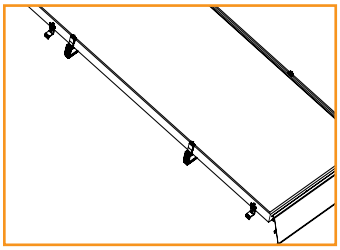

D.

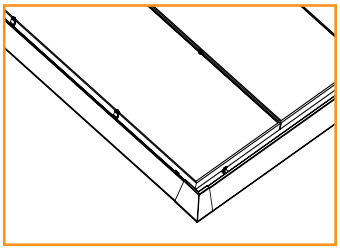

E.

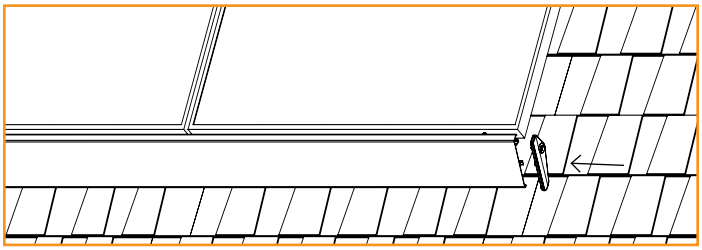

FRAME COMPATIBILITY

Contour Clamp has been tested or evaluated with all modules having frames within the referenced dimensions. Be sure the specific module being used meets the dimension requirements.

- ► **Flange Thickness: 1-3.5mm**
- ► **Usable Flange Length: 0-33mm.**

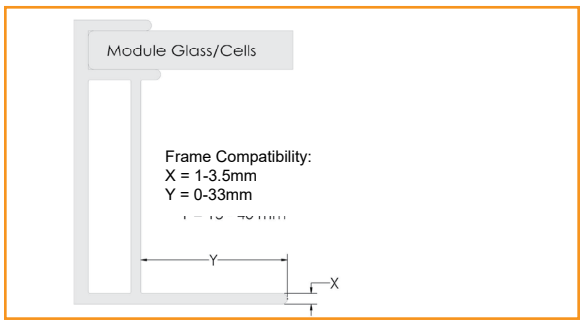

MODULE COMPATIBILITY

The Flush Mount System has been tested and evaluated to UL 2703 for bonding, grounding, mechanical loading and fire classification, and may be used to ground and/or mount PV modules listed to UL 1703 or UL 61730. A list of approved modules is included below. Unless otherwise noted, “xxx” refers to the module power rating and both black and silver frames are included in the certification.

FRAMED MODULE LIST

MAKE	MODELS
Adani	Adani modules with 30, 35 and 40 mm frames ASX-Y-ZZ-xxx Where "S" can be S or blank; "X" can be B, M or P; "Y" can be 6, 7, G12R or M10; and "ZZ" can be blank, 132, 144, PERC, B-PERC, or AB-PERC
AIONRISE	AIONRISE modules with 35 and 40 mm frames AIONyyG1-xxx Where "yy" can be 60 or 72
Amerisolar	Amerisolar modules with 35 and 40 mm frames AS-bYxxxZ Where "b" can be 5 or 6; "Y" can be M, P, M27, P27, M30, or P30; and "Z" can be blank, W or WB
AMPS	AMPS modules with 30 and 35 mm frames AMPS-xxxY-ZZZ Where "Y" can be N or P; and "ZZZ" can be 54BB or 108BB
Aptos Solar	Aptos modules with 30, 35 and 40 mm frames DNA-yy-zzaa-xxxbb Where "yy" can be 108, 120 or 144; "zz" can be BF, BFN, MF, or MFN; "aa" can be 10, 23 or 26; and "bb" can be blank, W, W-DG, W-USAptos1, W-USAptos1a or W-USAptos2
Astronergy Solar	Astronergy modules with 30, 35 and 40 mm frames aaSMbbyyC/zz-xxx Where “aa” can be CH or A; "bb" can be 60, 66, or 72; “yy” can be blank, 10 or 12; "C" can M, P, M(BL), M-HC, M(BL)-HC, P-HC, M(DG), M(DGT), N(DG) or RN(DG); and “zz” can be blank, HV, F-B, or F-BH
ASUN	ASUN modules with 35 and 40 mm frames ASUN-xxx-YYZZ-aa Where "YY" can be 60 or 72; "ZZ" can be M,or MH5; and "aa" can be blank or BB
Auxin	Auxin modules with 35 and 40 mm frames AXNCyzAxxxB Where "C" can be 6, 10 or G1; "y" can be M or P; "z" can be blank, 08, 09, 610, 11, or 612; and "A" can be blank, F, M or T; and "B" can be blank, A, B, C or W
Axitec	Axitec Modules with 30, 35 and 40 mm frames AC-xxxY/aaZZb Where "Y" can be M, P, MB, MBT, MH or TGB; "aa" can be blank, 125-, or 156-; "ZZ" can be 54, 60, 72, 96, 108, 120, or 144; "b" can be BB, BB-US, S, X, V, MX, TS, TS-US, US, VB, WS-US or XV
Big Shine Solar	Big Shine Solar modules with 35mm frames BSExxxN-144BMH-DG
Bila Solar	Bila Solar modules with 30 mm frames AA-xxxUS-6x24GG
Bluesun Solar	Bluesun modules with 30 and 35 mm frames BSMxxxY-AAA Where "Y" can be M or M10; and "AAA" can be 54HPH, 60HPH or 72HBD
Boviet	Boviet modules with 33, 35 and 40 mm frames BVMZZaaYY-xxxBcc Where "ZZ" can be 66, 76 or 86; "aa" can be 9, 10, 11 or 12; "YY" is M or P; and "B" can be blank, L or S; and "cc" can be blank, H, H-BF, H-BF-DG, H-HC, H-HC-BF, H-HC-BF-DG, HC-BF, HC-BF-DG, R-H-HC-BF or R-H-HC-BF-DG
BYD	BYD modules with 30 and 35 mm frames BYDxxxAY-ZZ Where "A" can be M6, P6, MH, MLB, MLT, NLB or PH; "Y" can be C or K; and "ZZ" can be 30 or 36

Canadian Solar	Canadian Solar modules with 30, 32, 35 and 40 mm frames CSbY-xxxZ Where "b" can be 1, 3, 6, 6.1, 6.2 or 7; "Y" can be H, K, L, N, P, R, U, V, W, X, Y, -48TD, -48TM, -54TM, -66HB, -66TB, -66TM or -72TB; and "Z" can be blank, H, HP, HR, M, P, T, MS, PX , M-SD, P-AG, P-SD, MB-AG, PB-AG, MS-AG, MS-HL, MS-SD or TB-AG
CertainTeed	CertainTeed modules with 30, 35 and 40 mm frames CTBBxxxYZZ-AA Where "BB" can be blank, M10 or TC; "Y" can be M, P, or HC; "ZZ" can be 00, 01, 10, 11 or 12; and "AA" can be 01, 02, 03, 04, 06, 08 or 09
Crossroads Solar	Crossroads Solar modules with 40 mm frames Crossroads Solar xxx
CSUN	Csun modules with 35 and 40 mm frames YYxxx-zzAbb Where "YY" is CSUN or SST; "zz" is blank, 60, or 72; and "A" is blank, P, M or MM; "bb" is blank, BB, 5BB, BW, or ROOF
CW Enerji	CW Enerji Modules with 35 mm frames CWTxxx-132TNB12R
Dehui	Dehui modules with 30, 35 and 40 mm frames DH-MYYYZ-xxx Where "YYY" can be 760, 772, 860, or 872; and "Z" can be B, F or W
Ecosolargy	Ecosolargy modules with 35 and 40 mm frames ECOxxxYzzA-bbD Where "Y" can be A, H, S, or T; "zz" can be 125 or 156; "A" can be M or P; "bb" can be 60 or 72; and "D" can be blank or B
Emmvee	Emmvee modules with 35 mm frames Exxx-YYZZZ-A Where "YY" can be M, P, HCM, HCMW, HCBG, HCBT; "ZZZ" can be 72, 108, 120, 132 or 144; and "A" can be blank, B, T, or BT
Energy America	Energy America modules with 30 and 40 mm frames EA-ZLKY-ZZZxxx/M Where "Y" can be 7 or 8; and "ZZZ" can be SHDB108 or THLDD132
ET Solar (EliTe Solar) (ELITE Solar)	ET Solar modules with 30, 33, 35 and 40 mm frames ET-YZZZxxxAA Where "Y" can be P, L, M, N or NR; "ZZZ" can be 48TBH, 660, 660BH, 672, 672BH, 754BH, 760BH, 766BH, 772BH, 760TBH, 766TBH, 772TBH, 778TBH or 848TBH; and "AA" can be GB, GL, TB, TW, WB, WW, BB, WBG, WWG, WBAC, WBCO, WWCO, WWBCO or BBAC
Fellow Energy	Fellow Energy modules with 30 and 35 mm frames FEyy-18ZZ-xxx Where "yy" can be 54, 66, 72 or 78; and "ZZ" can be X, X(N), X(ND) or X+(ND)
Flex	Flex modules with 35 and 40 mm frames FXS-xxxYY-ZZ; Where "YY" can be BB or BC; and "ZZ" can be MAA1B, MAA1W, MAB1W, SAA1B, SAA1W, SAC1B, SAC1W, SAD1W, SBA1B, SBA1W, SBC1B, or SBC1W
Freedom Forever	Freedom Forever modules with 35 mm frames FF-MPa-BBB-xxx Where "a" can be blank or 1
Freevolt	Freevolt modules with 35 mm frames ECP-PVGRAF-144HC-xxx
GCL	GCL modules with 35 mm and 40 mm frames GCL-ab/YY xxx Where "a" can be M or P; "b" can be 3 or 6; and "YY" can be 60, 72, 72H, or 72DH
GigaWatt Solar	Gigawatt modules with 40 mm frames GWxxxYY Where “YY” can be either PB or MB
Goldi	Goldi modules with 35 mm frames GS10-Byyy-zz-xxx Where "yyy" can be 108 or 144; and "zz" can be GF or TF

Goldi America	Goldi America modules with 30 mm frames GADYYT-xxxZZ Where "YY" can be 54 or 72; and "ZZ" can be BT or WT
Grape Solar	Grape modules with 35 mm frames GS-M120-xxx-FAB1
GreenWatts Solar	GreenWatts modules with 30 and 35mm frames HSYY-A-xxx-ZZ Where "YY" can be 54, 60, 66, 72 or 78; "A" can be blank or F; and "ZZ" can be MN or BOB
Hanersun	Hanersun modules with 30 mm frames HN18N-ZZHTxxxW Where "ZZ" can be 54 or 72
Hansol	Hansol modules with 30, 35 and 40 mm frames HSxxxYY-zz Where "S" can be A or S; "YY" can be AA, AB, AD, AE, PB, PD, PE, TB, TD, UB, UD, UE, XA, XD or ZB; and "zz" can be AH2, AN1, AN3, AN4, CGEA0, CGFA0, DGEA0, HH2, HV1, JH2, GNEA0, NGEA0 or NNEA0
Hanwa Solar	Hanwha Solar modules with 40 mm frames HSLaaP6-YY-1-xxxZ Where "aa" can be either 60 or 72; "YY" can be PA or PB; and "Z" can be blank or B
Heliene	Heliene modules with 35 and 40 mm frames YYZZxxxA Where "YY" can be 36, 60, 72, 96, 108, 120, 132, 144 or 156; "ZZ" can be HC, M, P, or MBLK; and "A" can be blank, HomePV, Bifacial, M10-SL, M10-SL-BLK, M10 TPC SL, M10 Bifacial, M10 SL-Bifacial, M10 TPC SL Bifacial, M10 NTYP SL or M10 NTYP SL Bifacial
Hounen Solar	Hounen Solar modules with 30 and 35 mm frames HNM7-YYY-xxx/Z Where "YYY" can be SHDB144 or UHLDD144; and "Z" can be M or N
HT-SAAE	HT-SAAE modules with 30, 35 and 40 mm frames HTyy-aaaZ-xxx Where "yy" can be 60, 66, 72 or 78, "aaa" can be 18, 156 or 166, "Z" can be M, P, M-C, P-C, M(S), M(VS), M(V), P(V), M(V)-C, P(V)-C, X, X(ND)-F or X+(ND)-F
Hyperion Solar (Runergy)	Hyperion or Runergy modules with 30 and 35 mm frames HY-DHzzzAC-xxxB Where "zzz" can be 96, 108, 132 or 144; "A" can be N or P; "C" can be 8, 11 or 11B; and "B" can be blank or B
Hyundai	Hyundai modules with 30, 32, 33, 35 and 40 mm frames HiY-SxxxZZ Where "Y" can be A, D, N or S; "S" can be M, S or T; and "ZZ" can be GI, HG, HI, KI, MI, MF, MG, NI, NF(BK), NJ, OJ, PI, RI, RG, RG(BF), RG(BK), SG, TI, TG, YH(BK) or XG(BK)
Illuminate USA	Illuminate USA Modules with 30 and 35 mm frames IL5-72HBD-xxxM
Imperial Star	Imperial Star Modules with 35 mm frames ISY7-zzzAAA-xxx/M Where "Y" can be M or N; "zzz" can be SHSB or UHSB; and "AAA" can be 108, 144 or 156
Indepwr Solar	Indepwr Solar modules with 35 mm frames iPWR-M10-xxyyy-xxxW Where "xx" can be 54, 60 or 72; and "yyy" can be BX2D or BX2S
Itek	Itek Modules with 40 mm frames IT-xxx-YY Where "YY" can be blank, HE, or SE, or SE72
JA Solar	JA Solar modules with 30, 35 and 40 mm frames JAyyzz-bbww-xxx/aa Where “yy” can be M, P, M6 or P6; “zz” can be blank, (K), (L), (R), (V), (BK), (FA), (TG), (FA)(R), (L)(BK), (L)(TG), (R)(BK), (R)(TG), (V)(BK), (BK)(TG), or (L)(BK)(TG); “bb” can be 48, 54, 60, 66, 72 or 78; "ww" can be D09, D10, D20, D30, D40, D41, D42, D45, S01, S02, S03, S06, S09, S10, S12, S17, S20, S30 or S31; and “aa” can be BP, LB, MB, MB-US, MR, SI, SC, PR, 3BB, 4BB, 4BB/RE, 5BB

Jakson Solar	Jakson Solar modules with 35mm frames JH-xxxYY Where "YY" can be BB or BT
Jinko	Jinko modules with 30, 35 and 40 mm frames JKMYxxxZZ-aa Where "Y" can either be blank or S; "ZZ" can be M, N, P, or PP; and "aa" can be blank, 54HL4-B, 60, 60B, 60H, 60L, 60BL, 60HL, 60HB, 60HBL, 6HBL-EP, 60-J4, 60B-J4, 60B-EP, 60(Plus), 60-V, 60-MX, 6RL3, 6RL3-B, 6TL3-B, 66HL4M-BDV, 7RL3-V, 7RL3-TV, 72, 72B, 72-J4, 72B-J4, 72(Plus), 72-V, 72H-V, 72L-V, 72HL-V, 72HBL-V, 72HL4-V, 72HL4-BDV, 72HL4-TV, 72-MX, 72H-BDVP, 72HL-TV, 72HL-V-MX3 or 72HL4-BDX
Jolywood Solar	Jolywood Solar modules with 30mm frames JW-HDYYN-ZZ-xxx Where "YY" can be 96, 108, 132 or 144; and "ZZ" can be blank, R0 or R2
KB Solar	KB Solar modules with 35 mm frames KBS-xxx-Mono-YY Where "YY" can be blank or BF
Kyocera	Kyocera Modules KYxxxZZ-AA Where "Y" can be D or U; "ZZ" can be blank, GX, or SX; and "AA" can be LPU, LFU, UPU, LPS, LPB, LFB, LFBS, LFB2, LPB2, 3AC, 3BC, 3FC, 4AC, 4BC, 4FC, 4UC, 5AC, 5BC, 5FC, 5UC, 6BC, 6FC, 8BC, 6MCA, or 6MPA
LA Solar	LA Solar modules with 35 mm frames LSxxxYY Where "YY" can be BF, BL, BLA, HC or ST
LG	LG modules with 35 and 40 mm frames LGxxxYaZ-bb Where "Y" can be A, E, M, N, Q, S; "a" can be A, 1, 2 or 3 "Z" can be C, K, T, or W; and "bb" can be A3, A5, A6, B3, B6, E6, E6.AW5, G3, G4, J5, K4, L5, N5, V5, V6
Longi	Longi modules with 30, 35 and 40 mm frames LRa-YYZZ-xxxM Where "a" can be 4, 5, 6, 7 or 8; "YY" can be blank, 54, 60, 66, or 72; and "ZZ" can be blank, BK, BP, HV, PB, PE, PH, HBD, HGD, HIB, HIH, HPB, HPH, HIBD, HABB, HABD or HGBB
Magnus Green Solar	Magnus Green Solar modules with 35 mm frames MGS-xxxW-yyy-M10 Where "yyy" can be M54H, M60H or M72H
Maxeon	Maxeon modules with 35, 40 and 46 mm frames SPR-AAAY-xxx-zzz Where "AAA" can be MAX, P or X; "Y" can be 3, 5, 6, 7, 21 or 22; and "zzz" can be blank, R, BLK, BLK-R, COM or UPP
Meyer Burger	Meyer Burger Modules with 35 mm frames Meyer Burger Black, White or Glass
Mission Solar (mSolar)	Mission Solar modules with 30, 33, 35 and 40 mm frames YYYbb-xxxZZaa Where "YYY" can be MSI, MSE, MSH, MSN, MSX, TXI or TXS; "bb" can be blank, 6, 10 or 60A; "ZZ" can be blank, HN, HT, MM, SE, SO, SQ , SR, SX, TS, 108, 120 or 144; and "aa" can be blank, 0B, 2B, BB, BW, 1J, 4G, 4J, 4S, 4T, 5K, 5R, 5T, 60, 6J, 6S, 6W, 6Z, 8K, 8T, 9R, 9S or 9Z
Mitrex	Mitrex modules with 30 and 40 mm frames Mxxx-XYZ Where "X" can be A, B, I or L; "Y" can be 1 or 3; and "Z" can be F or H
Mitsubishi	Mitsubishi modules PV-MYYxxxZZ Where "YY" can be LE or JE; and "ZZ" can be either HD, HD2, or FB
Motech	IM and XS series modules with 40 mm frames
Navitas	Navitas Modules with 30 and 35 mm frames NSZ-AAA-xxx-yyy Where "Z" can be G or M; "AAA" can be blank or BFT144-M10; and "yyy" can be blank, 120, 132 or 144

Next Energy Alliance	Next Energy Alliance modules with 35 and 40 mm frames yyNEA-xxxZZ where "yy" can be blank or US; "ZZ" can be M, MB or M-60
NE Solar	NE Solar modules with 30, 35 and 40 mm frames NESExxx-zzAAX-yy Where "zz" can be 54, 60 or 72; "AA" can be MH or TH; "X" can be blank or B; and "yy" can be M6 or M10
Neo Solar Power	Neo Solar Power modules with 35 mm frames D6YxxxZZaa Where "Y" can be M or P; "ZZ" can be B3A, B4A, E3A, E4A, H3A, H4A; and "aa" can be blank, (TF), ME or ME (TF)
Optivolt	Optivolt modules with 35 mm frames OPT10M-xxxW Where "W" can be W or B
Panasonic (HIT)	Panasonic modules with 35 and 40 mm frames VBHNxxxYYzzA Where "YY" can be either KA, RA, SA or ZA; "zz" can be either 01, 02, 03, 04, 06, 06B, 11, 11B, 15, 15B, 16, 16B, 17, or 18; and "A" can be blank E, G or N
Panasonic (EverVolt)	Panasonic modules with 30 mm frames EVPVxxxA Where "A" can be blank or H, K, HK, HK2 or PK
Peimar	Peimar modules with 35 and 40 mm frames AbxxxYzz Where "A" can be S or DR; "b" can be G, M, P or 10H; “Y” can be M, MB or P; and “zz” can be blank, (BF), or (FB)
Philadelphia Solar	Philadelphia modules with 30, 35 and 40 mm frames PS-YzzAA-xxxW Where "Y" can be M, MNB, MNG or P; "zz" can be 60, 72, 108, 132, 144 or 156; "AA" can be blank, (BF), (HC), (HCBF) or (HCBF)-GG; and "W" can be blank or W
Phono Solar	Phono Solar modules with 30, 35 and 40 mm frames PSxxxY-ZZ/A Where "Y" can be M, M1, MH, M1H, M4, M4H, M5GF, M5GFH, M6, M6H, M8, M8H, M8GF, M8GFH or P; "ZZ" can be 18, 20, 24 or 26; and "A" can be F, RNH, T, TH, THB, TNH, U, UH, UHB, VH, VHB or VNHB
Prism Solar	Prism Solar modules with 35 mm frames PST-xxxW-M72Y Where "Y" can be H, HB or HBI
Q CELLS	Q CELLS Modules with 30, 32, 35, 40 mm frames aaYY-ZZ-xxx where "aa" can be Q. or B.; "YY" can be PLUS, PRO, PEAK, LINE PRO, LINE PLUS, PLUS DUO, PEAK DUO or TRON; and "ZZ" can be G3, G3.1, G4, G4.1, L-G2, L-G2.3, L-G3, L-G3.1, L-G3y, L-G4, L-G4.2, L-G4y, LG4.2/TAA, BFR-G3, BLK-G3, BFR-G3.1, BLK-G3.1, BFR-G4, BFR-G4.1, BFR G4.3, BLK-G4.1, G4/SC, G4.1/SC, G4.1/TAA, G4.1/MAX, BFR G4.1/TAA, BFR G4.1/MAX, BLK G4.1/TAA, BLK G4.1/SC, EC-G4.4, G5, G5/SC, G5/TS, BLK-G5, BLK-G5/SC, BLK-G5/TS, L-G5, L-G5.1, L-G5.2, L-G5.2/H, L-G5.3, G6, G6/SC, G6/TS, G6+/TS, G6+, BLK-G6, L-G6, L-G6.1, L-G6.2, L-G6.3, L-G6.3/BFG, G7, BLK-G6+, BLK-G6+/AC, BLK-G6+/HL, BLK-G6+/SC, BLK-G6/TS, BLK-G6+/TS, BLK-G7, G7.2, G8, BLK-G8, G8+, BLK-G8+ L-G7, L-G7.1, L-G7.2, L-G7.3, L-G8, L-G8.1, L-G8.2, L-G8.3, L-G8.3/BFF, L-G8.3/BFG, L-G8.3/BGT, M-G2+, BLK M-G2+, BLK M-G2.C+, BLK M-G2.D+, BLK M-G2.F+, BLK M-G2.H+, BLK M-G2+/AC, BLK M-G2.C1+/AC, BLK M-G2.D1+/AC, BLK M-G2.F1+/AC, BLK M-G2.H1+/AC, ML-G9, BLK ML-G9, ML-G9+, BLK ML-G9+, BLK-G10, BLK-G10+, BLK G10+/AC, BLK-G10+/HL, ML-G10, BLK ML-G10, ML-G10+, BLK ML-G10+, ML-G10.a, BLK ML-G10.a, ML-G10.a+, BLK ML-G10.a+, BLK ML-G10.B+, BLK ML-G10.C+, BLK ML-G10.C1+/AC, BLK ML-G10.D+, BLK ML-G10.D1+/AC, BLK ML-G10 +/t, BLK ML-G10+/TS, XL-G2.3/BFG, XL-G9, XL-G9.2, XL-G9.3, XL-G9.3/BFG, XL-G10.2, XL-G10.3, XL-G10.c, XL-G10.d, XL-G10.d/BFG, XL-G10.3/BFG, XL-G11.2, XL-G11.3, XL-G11.3/BFG, XL-G11S.3/BFG or XL-G11S.L3/BFG
Rayzon Solar	Rayzon Solar modules with 35 and 40 mm frames RSYxxxAAZZ Where "Y" can be blank or B; "AA" can be blank, 132 or 144; and "ZZ" can be TGC or WC
Recom	Recom modules with 35 and 40 mm frames RCM-xxx-6yy Where "yy" can be MA, MB, ME or MF

REC Solar	REC modules with 30 and 38 mm frames RECxxxYYZZ Where “YY” can be AA, M, NP, NP2, NP3, PE, PE72, TP, TP2, TP2M, TP2SM, TP2S, TP3M or TP4; and “ZZ” can be blank, Black, BLK, BLK2, SLV, 72, Pro M, Pure, Pure-R, Pure-RX, Pure-RX-DC or Pure 2
Renesola	ReneSola modules with 30, 35 and 40 mm frames AAxxxY-ZZ Where "AA" can be SPM(SLP), JC or RS6; "Y" can be blank, F, M, S or NBG; and "ZZ" can be blank, Ab, Ab-b, Abh, Abh-b, Abv, Abv-b, Bb, Bb-b, Bbh, Bbh-b, Bbv, Bbv-b, Db, Db-b, 24/Bb or E3
Renogy	Renogy Modules with 35 and 40 mm frames RZZ-xxxY-AAA Where "ZZ" can be NG or SP; "Y" can be D or P; and "AAA" can be blank, 144, BB-108, BB-120 or BK-120
Risen	Risen Modules with 30, 35 and 40 mm frames RSMyy-a-xxxZZ Where "yy" can be 60, 72, 110, 120, 132 or 144; "a" can be 6, 7 or 8; and "ZZ" can be M, P or BMDG
Rivulet Solar	Rivulet Solar modules with 35 mm frames RE72-18X(ND)-xxx
Saatvik	Saatvik Modules with 35 mm frames SGExxx-YYYZZZ Where "YYY" can be 108 or 144; and "ZZZ" can be MHC, MBHC or MHCB
S-Energy	S-Energy modules with 35 and 40 mm frames SABB-CCYYY-xxxZ Where "A" can be C, D, L or N; "BB" can be blank, 20, 25, 40 or 45; "CC" can be blank, 60 or 72; "YYY" can be blank, BDE, MAE, MAI, MBE, MBI, MCE or MCI; and "Z" can be V, M-10, P-10 or P-15
SEG Solar	SEG Solar with 30, 35 and 40 mm frames SEG-aYY-xxx-ZZ Where "a" can be blank, 6 or B; "YY" can be blank, MA, MB, PA, or PB; and "ZZ" can be blank, BB, BG, BW, HV, WB, WW, BMB, BMA-HV, BMA-BG, BMA-TB, BMB-TB, BMB-HV, BMD-BG, BMD-HV, BMB-BG, BTA-BG, BTB-BG, BTC-BG, BTD-BG, BTZ-BG, BMD-TB or BMZ-BG
Seraphim	Seraphim modules with 30, 33, 35 and 40 mm frames SRP-xxx-YYY-ZZ Where "xxx" is the module power rating; and "YYY" can be BMA, BMB, BMD, BTA, BTC, BTD, BTE, 6MA, 6MB, 6PA, 6PB, 6QA-XX-XX, and 6QB-XX-XX; ZZ is blank, BB, BG or HV
Sharp	Sharp modules with 35 and 40 mm frames NUYYxxx Where “YY” can be SA or SC
Shinsung E&G	Shinsung Modules with 35 mm frames SSVxxx-144MH
Silfab	Silfab Modules with 35 and 38 mm frames SYY-Z-xxxAb Where "YY" can be IL, SA, LA, SG or LG; "Z" can be blank, M, P, or X; "A" can be blank, B, H, M, N, Q or X; and "b" can be A, C, C+, D, G, K, L, M, M+, N, T, U or X
Sinotec	Sinotec Modules with 30 and 35 mm frames STS-xxxP-aabb Where "aa" can be 54 or 72; and "bb" can be BB, DB or DD
Sirius PV	Sirius PV Modules with 35 mm frames ELNSMzzM-HC-yy-xxx Where "zz" can be 48, 54 or 72; and "yy" can be blank, BF, N or N-SNRN
Solar4America	Solar4America modules with 30, 35 and 40 mm frames S4Axxx-YYzzAA Where "YY" can be 60, 72, 108 or 144; "zz" can be MH5, MH10, TH10 or TH16; and "AA" can be blank or BB, BW, SW or STT
Solarever	Solarever modules with 30, 35 mm frames SE-zzz*yy-xxxM-aaa Where "zzz" can be 166 or 182; "yy" can be 83, 91 or 105; and "aaa" can be 108, 96-BD, 120-BH, 144 or 144N

Solaria	Solaria modules with 35 and 40 mm frames PowerA-xxxY-ZZ Where "A" can be X or XT, "Y" can be R or C; and "ZZ" can be blank, AC, BD, BX, BY, PD, PL, PM, PM-AC, PX, PZ, WX, WZ or 4T
Solarcity (Tesla)	Solarcity modules with 40 mm frames SCxxxYY Where "YY" can be blank, B1 or B2
SolarSpace	SolarSpace modules with 30 and 35mm frames SSB-yyzzz-xxxA Where "B" can be 8 or A; "yy" can be 48, 54, 66 or 72; "zzz" can be HD, HDB or HSB; and "A" can be M or N
SolarTech	SolarTech modules with 40 mm frames AAA-xxxYY Where "AAA" can be PERCB-B, PERCB-W, HJTB-B, HJTB-W or STU; "YY" can be blank, PERC or HJT
SolarWorld AG	SolarWorld Sunmodule Plus, Protect, Bisun, XL, Bisun XL, may be followed by mono, poly, duo, black, bk, or clear; modules with 31 and 33 mm frames SW-xxx
SolarWorld Americas	SolarWorld Sunmodule Plus, Protect, Bisun, XL, Bisun XL, may be followed by mono, poly, duo, black, bk, or clear; modules with 33 mm frames SWA-xxx
Sonali	Sonali Modules with 35 and 40 mm frames SS-M-xxx-yyy Where "M" can be blank or M; and "yyy" can be blank, 108M-B or W-M60H M10
Star Solar	Star Solar modules with 35 mm frames Star-xxxW-YYY-ZZZ Where "YYY" can be M60H or M60HB; and "ZZZ" can be blank or M10
Stion	Stion Thin film modules with 35 mm frames STO-xxx or STO-xxxA
SunEdison	SunEdison Modules with 35 and 40 mm frames SE-YxxxZABCDE Where "Y" can be B, F, H, P, R, or Z; "Z" can be 0 or 4; "A" can be B,C,D,E,H,I,J,K,L,M, or N ; "B" can be B or W; "C" can be A or C; "D" can be 3, 7, 8, or 9; and "E" can be 0, 1 or 2
Sungold	Sungold Modules with 35 mm frames SG-xxxWM
Suniva	Suniva modules with 35, 38 and 40 mm frames OPTxxx-AA-B-YYY-Z MVXxxx-AA-B-YYY-Z Where "AA" is either 60 or 72; "B" is either 4 or 5; "YYY" is either 100,101,700,1B0, or 1B1; and "Z" is blank or B
Sunket	Sunket modules with 35 mm frames SKTxxxM10-144S1
Sunmac Solar	Sunmac modules with 30 and 35 mm frames SMxxxMaaaZZ-YY Where "aaa" can be 660, 754 or 772; "ZZ" can be NH or SH; and "YY" can be BB or TB
Sunpower	Sunpower standard (G3 or G4) or InvisiMount (G5) 35, 40 and 46 mm frames SPR-Zb-xxx-YY Where "Z" can be A, E, M, P or X; “b” can be blank, 17, 18, 19, 20, 21, or 22; and “YY” can be blank, BLK, COM, C-AC, D-AC, E-AC, BLK-E-AC, G-AC, BLK-G-AC, H-AC, BLK-H-AC, BLK-C-AC, or BLK-D-AC
Sunpro	Sunpro Modules with 30 and 35 mm frames SPDGxxx-NyyyM10 Where "yyy" can be 108 or 144
Sunspark	Sunspark modules with 30, 35 and 40 mm frames SYYBB-xxxZ-A Where “YY” can be G, MX or ST; "BB" can be blank, 7F54M(H) or 7G72M(H); and “Z” can be blank, M, MB, M3, M3B, P or W; and "A" can be blank, 60 or 72

Suntech	Suntech modules with 35 and 40 mm frames STPxxxy-zz/aa Where "y" is blank or S; and "zz" can be 20, 24, A60, A72U, B60 or B72; and "aa" can be Vd, Vem, Vfw, Vfh, Vnh, Wdb, Wde, Wd, Wfhb or Wnhb
Talesun	Talesun modules with 30, 35 and 40 mm frames TAByZZaa-xxx-b Where "A" can be D, M or P; "B" can be 3, 6, 7 or 9; "y" can be blank, F, G, H, I or L; "ZZ" can be 48, 54, 60, 66, 72 or 78; "aa" can be M, M(H), or P; and "b" can be blank, B, T, or (H)
Tata Power Renewable Energy	TP Solar Ltd modules with 30mm frames TPxxxZZZ Where "ZZZ" can be HG10B or VG12R16NB
Tesla	Tesla modules with 40 mm frames TZZxxxY Where "ZZ" can be blank or SP; and "Y" can be blank, H or S
Thornova	Thornova Modules with 30 and 35 mm frames TS-YYZZ(xxx)-X Where "YY" can be BB, BBT, BG, BGT, BW or BWT; "ZZ" can be 48, 54, 60, 66 or 72; and "X" can be blank, G11, G12R or X
Topco Solar	Topco Solar modules with 30mm frames TPM7-SH108-xxx/M
Trina	Trina Modules with 30, 35 and 40 mm frames TSM-xxxYYZZ Where "YY" can be DD05, DD06, DD14, DE14, DE15, DE15V, DEG15, DEG15VC, DE18M, DEG18MC, DE09, DE19, DEG19C.20, DE06X, PA05, PC05, PD05, PD06, PA14, PC14, PD14, PE14, PE15, NE19RC, NED19RC, NEG19RC, NE09RC, NEG9RH, NE09RH.05 or NFG19RC ; and "ZZ" can be blank, .05, .05(II), .08, .08(II), .10, .18, .08D, .18D, 0.82, .002, .00S, 05S, 08S, .20, .20(II), .25, A, A.05, A.08, A.10, A.18, (II), A(II), A.05(II), A.08(II), A.082(II), A.10(II), A.18(II), C.05, C.07, C.05(II), C.07(II), H, H(II), H.05(II), H.08(II), HC.20(II), HC.20(II), M, M(II), M.05(II), MC.20(II)
Universal	Universal Solar Modules with 35 mm frames UNI-xxx-yyyZZZ-aa Where "yyy" can be 108, 120 or 144; "ZZZ" can be M, MH, BMH; and "aa" can be blank, BB or DG
URE	URE modules with 30 and 35 mm frames DyZxxxaa Where “D” can be D or F; “y” can be A, B, 6 or 7; “Z” can be F, K, L or M; and “aa” can be B7G, B8G, BFG, BFG-BB, C8G, DFG-BB, H3A, H4A, H8A, L4A, E7G-BB, E8G, E8G-BB, MFG, MFG-BB, MF1-BB or M7G-BB
Vikram	Vikram solar modules with 30, 35 and 40 mm frames XVSyy.ZZ.AAA.bb Where "X" can be blank, Hypersol, Paradea, Prexos or Somera; "yy" can be M, P, MBB, MDH, MDHT, MH, MS, MHBB, or PBB; "ZZ" can be 54, 60, 72 or 78; "AAA" is the module power rating; and "bb" can be 03, 04 or 05
VSUN	VSUN modules with 30, 35 and 40 mm frames VSUNxxxA-YYz-aa Where "A" can be blank or N; "YY" can be 60, 72, 96, 108, 120, 132, 144 or 156; "z" can be M, P, MH, PH, BMH, BMHR or BMHS; and "aa" can be blank, BB, BW, DG, DG-BB or DG-BT
Waaree	Waaree modules with 30, 35 and 40 mm frames AA-yy-xxx Where "AA" canbe WS, Bi or BiN; and "yy" can be blank, M, MB, MD, MDI, MDIB, 08, 21, 33, 55, 57 or 66
Winaico	Winaico modules with 35 and 40 mm frames Wsy-xxxZa Where "y" can be either P or T; "Z" can be either M, P, or MX; and "a" can be blank or 6
Yingli	Yingli modules with 30, 35 and 40 mm frames YLxxxZ-yy Where "Z" can be D or P; "yy" can be blank, 29b, 30b, 34d, 35b, 36b, 37e 1/2, 37e 1500V 1/2, 40d, 49e 1/2 or 49e 1500V 1/2

MODULE COMPATIBILITY

Yotta	Yotta modules with 30 and 35 mm frames YSM-Bxxx-ZZ-72-1 Where "ZZ" can be 06 or 10
Zeus	Zeus Solar Modules with 40 mm frames ZxxxM-HB
ZN Shine	ZN Shine modules with 30 and 35 mm frames ZXMY-AAA-xxx/M Where "Y" can be 6, 7, 8 or R; "AAA" can be 72, NH120, NH144, NHDB144, NHLDD144, SH108, SH144, SHDB120, SHDB144, SHLDD120, SHLDD144, TP120, TPLDD120, UH108, UHLDD108 or ,UHLDD144 or UPLDD132; and "M" can be M or N

FRAMELESS MODULE LIST

Module compatability provided by others.

MAKE	MODELS
Astronergy Solar	Astronergy frameless modules CHSM6610P(DG)-xxx
Canadian Solar	Canadian Solar frameless modules CSbY-xxx-Z Where “b” can be 3 or 6; “Y” is K, P, U, or X; and “Z” can be M-FG, MS-FG, P-FG, MB-FG, or PB-FG
Heliene	Heliene frameless modules YYZZxxxA Where "YY" can be72; "ZZ" can be M; and "A" can be GH
Jinko	Jinko frameless modules JKMxxxPP-DV
Prism Solar	Prism Solar frameless modules BZYY-xxxAAA Where "Z" can be i or N; "YY" can be 48, 60, 60S, 72 or 72S; and "AAA" can be blank or BSTC
Risen	Risen frameless modules RSMyy-6-xxxZZ Where “yy” can be 60, 72, 120 or 144; and “ZZ” can be MDG or PDG
Stion	Stion frameless modules STL-xxx or STL-xxxA
Sunpreme	Sunpreme frameless modules GXB-xxxYY Where “YY” can be blank or SL
Trina	Trina frameless modules TSM-xxxYY Where “YY” can be either DEG5(II), DEG5.07(II), DEG5.40(II), DEG5.47(II), DEG14(II), DEG14C(II), DEG14C.07(II), DEG14.40(II), PEG5, PEG5.07, PEG5.40, PEG5.47, PEG14, or PEG14.40